STAGNATION AND DROPOUT AT PRIMARY STAGE

IN

NINE EDUCATIONALLY BACKWARD STATES

J.K. Gupta

P.K. Rastogi

M.K. Gupta

DEPARTMENT OF MEASUREMENT EVALUATION SURVEY & DATA PROCESSING

NATIONAL COUNCIL OF EDUCATIONAL RESEARCH & TRAINING
SRI AUROBINDO MARG, NEW DELHI - 110016

****

Universalisation of elementary education has been a major thrust of educational policy and plan since independence. All ventures in this direction have, however, been off set by a high rate of stagnation and dropouts at primary stage which has persisted as the main stumbling block in achieving this goal.

In the post independence period various measures, both academic and administrative, have been taken up from time to time to arrest or minimise stagnation and dropouts.

A number of studies have been conducted by various institutions or individuals to estimate the causes and extent of wastage and stagnation. But, by and large, these studies were confined to either selective small areas or their sample sizes were unusually small to permit dependable generalisations.

The present study was taken up by NCERT to estimate the extent of educational wastage in terms of stagnation and dropout in the nine educationally backward states of Andhra Pradesh, Assam, Bihar, Jammu and Kashmir, Madhya Pradesh, Orissa, Rajasthan, Uttar Pradesh and West Bengal. Bulk of children of the age-group 6 to below 11 years in these states were either not going to school or dropping out from them soon after getting enrolled or stagnating in schools at primary stage. The size of the sample of this study is large enough for the derivation of quite a valid estimation of the indices of stagnation and dropout for these states.

Thanks are due to the Education Departments of the states for their cooperation and help in the completion of this project. The valuable contribution of project incharges deserves a special mention at this stage, for having accomplished the arduous task of collecting and scrutinising the data for the project.

I also take this opportunity to place on record my appreciation of the meticulous and conscientious efforts of Shri J.K. Gupta, Shri P.K. Mazumdar and Shri M.K. Gupta of this Department in preparing this technical report.

Thanks are also due to Dr. M.A. Saxena who had initiated this project and handled it along with other members xxxxx xxxxxxxxxx xxxxxx xx xxxxxxxx xxxxxxxxxxxx of the project team until September, 1986. The names of Prof. A.B.L. Srivastava and Prof. K.N. Chaturvedi deserve a special mention for guiding the study.

I would like to conclude by stating that the scientifically arrived at estimation of stagnation and dropout, through the use of sophisticated techniques is likely to have a much wider application than what was originally anticipated. It is hoped that these findings will be found to be of practical use in educational planning and administration and may also help in identifying and implementing collective measures both in the content and process of education for realising the goal of Universalisation of Elementary Education.

Sd/-
(H.S. Srivastava)
Dean (Academic) and
Head of the Department of
Measurement, Evaluation,
Survey & Data Processing

May 30, 1989.

C O N T E N T S

Foreword

CHAPTER 1	INTRODUCTION	1-5
CHAPTER 2	DESIGN OF THE STUDY Sampling design; Procedure of selection of schools from rural areas; Procedure of selection of Schools from urban areas; Tool for collection of data; Estimation of cell frequencies; Procedure for estimating stagnation and dropout rates; Definition of terms.	6-19
CHAPTER 3	ORGANISATION OF THE STUDY	20-23
CHAPTER 4	SOME INDICES OF STAGNATION AND DROPOUTS IN DIFFERENT STATES	24-161
	i) Andhra Pradesh	24-40
	ii) Assam	41-54
	iii) Bihar	55-71
	iv) Jammu & Kashmir	72-87
	v) Madhya Pradesh	88-102
	vi) Orissa	103-121
	vii) Rajasthan	122-134
	viii) Uttar Pradesh	135- 45
	ix) West Bengal	146-161

APPENDICES

1	Questionnaire	162-165
2-10	Flow Diagrams	166-174
11	List of Project Incharge in different States.	175-176

CHAPTER - I

INTRODUCTION

As a constitutional obligation universalisation of elementary education came to the fore as the main thrust of educational policy and programmes since independence. The Directive Principles of State Policy in the Indian Constitution unambiguously enunciate this in the following words in Article 45 "The State shall endeavour to provide, within a period of ten years from the commencement of the constitution for free and compulsory education, for all children until they complete the age of fourteen years". This resolve was again reiterated through the Resolution on the National Policy on Education(1968) and reaffirmed in National Policy on Education, 1986. This also set 1990 as the target for achieving universal enrolment at primary level and the year 1995 at the upper primary level.

With a view to achieving this goal, targets were set and allocation made in all the five year plans which treated universalisation of elementary education as a priority item. In the Fifth Five Year Plan elementary education was incorporated in the National Minimum Needs Programme (NMNP). Provision of educational facilities at a convenient walking distance to children upto the age of fourteen years is the first stated prerequisite for achieving the goal of universalisation.

Some related statistics appear appropriate to be mentioned at this stage. According to Fourth All-India

Educational Survey (1978), 92.82 percent of rural population had access to primary stage schooling facility upto walking distance of 1 km. whereas 78.83 percent of rural population was served by middle stage schooling facility within a walking distance of 3 km. A summarily drawn inference of this could that the provision of educational facilities has been made to almost all children as far as schooling facility for primary level education is concerned but that in regard to middle stage schooling facility, the goal of universalprovision has yet to be achieved. This survey also reveals that 64.13 perc of the children in the age-group 6 to below 11 years and 41.72 percent of the children in the age-group 11 to below 14 years were in schools which brings us to the conclusion that the proportion of children enrolled in schools is much less a against provision of schooling facilities available to them.

The children not attending school can broadly be classified into two categories. First category includes children who did not join the school at all (non-enrolment) whereas the second category comprises those children who were enrolled in schools but later on withdrew before completing a stage of education. The data of the Fourth All-India Educati Survey clearly shows that the problem of non-enrolment is severe at middle stage than at primary stage.

A further in-depth study of the statistics reveals that most of the children [illegible] class I drop [illegible] subsequent classes. The fact that only around 40 percent of the children enrolled in class I reach class V is by itself alarming. This poor out-turn results in wastage of precious resources invested on education. Thus for achieving the universalisation of elementary education it is imperative to control dropouts at the primary stage.

The problem of wastage and stagnation which has now assumed disturbing proportions was highlighted for the first time by the Hartog Committee's Report in 1928. The first over study of this problem seems to have been undertaken in early 1940's by the Bombay Provincial Board of Primary Education in the erstwhile Bombay Province. Since then several studies were conducted by several institutions and individuals for identifying the extent and causes of wastage and stagnation. Each of these studies has suggested some remedial measures. These studies had their own limitations. By and large they were confined to either a few districts or at best a few regions within a state and their samples too were very limited. At the national level only two important investigations were taken up.

The first effort to study wastage and stagnation at the national level was made by NCERT in 1964. In this study the extent of wastage and stagnation was worked out separately

for primary and middle stages using the data already available with the then Ministry of Education and Social Welfare. The problem was also studied on a sample basis in the states of Maharashtra, Punjab and Rajasthan and the erstwhile Union Territory of Himachal Pradesh and Delhi.

In 1976 NCERT again undertook a study on the problem of stagnation and dropouts on a highly restricted sample basis. The study covered the states of Andhra Pradesh, Assam, Bihar, Gujarat, Jammu & Kashmir, Karnataka, Kerala, Madhya Pradesh, Maharashtra, Orissa, Punjab, Rajasthan, Tamil Nadu, Uttar Pradesh and West Bengal. From each state 3 to 5 primary schools of the rural areas and 2 to 4 primary schools of the urban areas constituted the sample. In this study estimates on stagnation and dropouts were made separately for boys and girls, for rural and urban areas as well as for students belonging to Scheduled Castes and Scheduled Tribes categories. Since the sample size was very small the scope of generalisation of the results was severely restricted.

It was in this background that the present study was taken up by the NCERT for estimating the extent of wastage in terms of stagnation and dropout rates at primary stage.

Objectives of the Study:

The objectives of the study are to estimate overall wastage rates in terms of stagnation (repeater) and dropout

rates separately for boys and girls and for rural and urban areas and for children belonging to Scheduled Caste and Scheduled Tribe categories.

Scope of the Study:

(i) The study covers nine educationally backward states namely Andhra Pradesh, Assam, Bihar, Jammu & Kashmir, Madhya Pradesh, Orissa, Rajasthan, Uttar Pradesh and West Bengal.

(ii) All the children studying at primary stage of education in recognised schools of the concerned states from 1979-80 to 1981-82 constitute the population of the study.

(iii) The study is a status study and it does not propose to investigate the causes of stagnation and dropouts.

CHAPTER 2

DESIGN OF THE STUDY

This chapter deals (a) the sampling design adopted for selection of schools from rural and urban areas; (b) the tool used for the collection of data; and (c) the estimation of cell frequencies and the procedure for estimating stagnation and dropout rates. Definition of various terms used in the study also form a part of the chapter.

Sampling Design:

Ideally children enrolled at primary stage in recognised schools in each state should have formed the population of the study. But it was not feasible to have such a sampling frame. Alternatively, a sample of recognised schools having primary sections in them was selected from each state and all the children in selected schools were taken into consideration for estimating stagnation and dropout rates.

To draw a representative sample each state was divided into two domains namely rural and urban areas. The allocation of schools to rural and urban areas was made on the basis of average size of schools and the number of schools, as per the data of the Fourth All-India Educational Survey. Table 1 gi

CONTD.....7/-

area-wise number of schools allocated for each state.

TABLE 1

Number of Schools Allocated in Rural and Urban Areas

Sl.No.	State	Rural	Urban	Total
1.	Andhra Pradesh	780	200	980
2.	Assam	720	250	970
3.	Bihar	800	200	1000
4.	Jammu & Kashmir	600	200	800
5.	Madhya Pradesh	780	250	1030
6.	Orissa	800	200	1000
7.	Rajasthan	700	300	1000.
8.	Uttar Pradesh	880	250	1130
9.	West Bengal	720	250	970

Procedure for Selection of Schools from Rural Areas.

The selection of schools from rural areas was made by using a two-stage sampling scheme. The first stage of selection consisted of selection of blocks, which were the primary or first stage sampling units (PSU). Table 2 gives the number of blocks selected in different identified states. Selection of PSU's was made by using probability proportional to size (PPS) sampling with replacement, number of schools with primary sections in a block being the size of PSU. Blocks were selected regionwise in

all the states except Madhya Pradesh. At the second stage of selection, schools were selected from the sampled blocks by using simple random sampling without replacement (SRSWOR). Thus schools formed the second stage sampling unit (SSU). The number of schools selected from each block is given in Table 2. In some states the number of schools actually selected has increased from the allotted number, in order to provide adequate representation to different regions within a state.

TABLE 2

Number of Selected Blocks and Schools Selected per Block

Sl.No.	State	No.of blocks selected	No.of schools selected per block
1.	Andhra Prade	71	13
2.	Assam	72	10
3.	Bihar	80	10
4.	Jammu & Kashmir	56	12
5.	Madhya Pradesh	65	12
6.	Orissa	80	10
7.	Rajasthan	70	10
8.	Uttar Pradesh	110	8
9.	West Bengal	60	12

Procedure for Selection of Schools from Urban Areas:

Similar to other [illegible] in urban [illegible], a two-stage sampling scheme was adopted for selecting the schools, towns being the primary or first stage sampling units (PSU) and schools as the second stage sampling units (SSU). Primary sampling units were selected using probability proportional to size sampling. Population of the town was considered as the size of PSU instead of number of schools as taken in the case of rural areas. This was done as the information on number of schools with primary sections in the towns was not readily available with the states and it was stupendous task to collect this information from all the towns. From each selected town, the selection of schools (SSU) has been done using simple random sampling without replacement (SRSWOR).

Selection of Towns:

Different classes of towns as given in 1981 Census formed the basis for stratification for the selection of towns of the six classes of towns, five strata were made by clubbing class V and class VI towns together. From each stratum a sample of 10 percent of the towns with a minimum of three (if available) were selected by adopting the procedure of probability proportional to size sampling with replacement, size being the population of the town.

Selection of Schools from Selected Towns:

From each of the selected class I towns 24 schools were selected using simple random sampling without replacement. Similarly, 16 and 8 schools were selected from class II and class III towns respectively. All the schools of the remaining selected towns were included in the sample. Because of this, the number of schools selected from urban areas may differ from the allocated number of schools.

Representation of Scheduled Tribe Students:

As Scheduled Tribe population is concentrated in certain areas which are known as sub-plan areas, the sample drawn without giving proper representation to these areas might not have provided reliable estimates of stagnation and dropout for Scheduled Tribe children. In view of the special features of the Scheduled Tribe population, it was considered worthwhile to give proportional [illegible] for the [illegible] sub-plan areas while selecting the rural and urban primary sampling units.

Tool for Collection of Data :

Questionnaire constituted the tool of data collection. The questionnaire, given in Appendix I, was developed by the project team at NCERT, New Delhi. It was decided that the questionnaire should be printed in regional language of the state. But Jammu & Kashmir and West Bengal preferred to use

the English version. Questionnaires in Hindi were canvassed in four states namely Bihar, Madhya Pradesh, Rajasthan and Uttar Pradesh. In Andhra Pradesh, Assam and Orissa questionnaires in regional language of the state were used.

The information through this questionnaire was sought for primary classes on new entrants, promotees, repeaters, students appeared and passed in the final examination. This information was collected for the years 1979-80, 1980-81 and 1981-82, in respect of total and girl students of all communities as also for Scheduled Caste and Scheduled Tribe categories.

Following are the definitions of some of the terms used in the questionnaires.

New Entrants: Those pupils who were not studying/enrolled in any recognised school of the state in the previous year have been treated as new entrants. (Students seeking admission with transfer certificate from recognised [illegible] of the state were not considered as new entrants).

Promotees: Those pupils who passed or were promoted from the previous class from any recognised school of the state have been treated as promotees.

Repeaters: Those pupils who failed or were detained in the same class in any recognized school of the state have been treated as repeaters.

Estimation of Cell Frequencies :

As stated earlier rural areas were divided into homogeneous regions known as strata. Each region (stratum) was further divided into two sub-strata namely tribal and non-tribal areas. The procedure to estimate the cell frequencies of items 11 and 12 pertaining to enrolment and examination results for each sub-stratum is given below:

1. The average for each cell was calculated by dividing the sum of the corresponding cell frequencies of schools in a block by the number of schools responded in that block. Let this average for bth block be denoted by $\bar{Y}_b$.

2. Estimate of cell frequencies for the sub-stratum on the basis of bth block was worked out by multiplying the average ($\bar{Y}_b$) by $\frac{S_b \times N_b}{P_b}$ where S_b is the number of schools in bth block was selected, N_b is the total number of schools in bth block, and P_b is the probability of selection of bth block.

3. Estimate of cell frequencies for a sub-stratum is then calculated by adding the indices obtained above over all the blocks in that sub-stratum and dividing it by the number of blocks in the sub-stratum (sum of S_b over all blocks).

4. Pooled estimates for tribal and non-tribal rural areas were worked out by adding each of the sub-stratum estimates over all strata.

5. Finally, the estimates of cell frequencies for all, SC and ST categories in rural areas were obtained by adding the respective cell frequencies of tribal and non-tribal estimates.

A similar procedure was adopted for deriving the pooled estimates for urban areas. But urban areas were not classified into tribal and non-tribal areas.

Procedure for Estimating Stagnation and Drop-out Rates:

The above mentioned estimated values for rural and urban areas provided the base for estimating stagnation and dropout rates by using 'reconstructed cohort method' discussed in the subsequent section. Here 'cohort' refers to a group of pupils joining class I in 1979-80.

The ideal way of estimating stagnation and dropout rates would have been by adopting the 'true cohort method' in which all pupils of the cohort are required to be followed up till they either complete the cycle or drop out in between. But this method is not practicable in a country of the size of India as it requires huge financial resources and is very time consuming. However, such a method is used in some developed countries with smaller population like Sweden.

Another method that is most commonly used for this type of studies is the "apparent cohort method". In this method the enrolment in class I in a given year is compared with enrolment in successive classes during successive years and it is assumed that the decrease from each class to the next corresponds to wastage. Thus it assumes that pupils are either promoted or drop out of school and ignores the repetition factor. Consequently, it gives very rough approximation of the estimate of dropout rate.

In cases where data on repeaters for each class are also available, an alternative method known as 'reconstructed' cohort method' which has been used in this study, would provide more precise estimates of dropout as compared to 'apparent cohort method'.

Reconstructed Cohort Method:

This method makes it possible to follow up a group of pupils entering class I in terms of their getting promoted from one class to the next, repeating a class or dropping out of school, without actually keeping track of the cohort from year to year, till they complete the cycle or drop out in between. This method can be used even if the data on class-wise enrolment, promotees, and repeaters are available just for two consecutive years. In this study the requisite data was available for three consecutive years, which provided

two sets of values for promotee, repeater and dropouts rates for each class (one set of values based on 1979-80 and 1980-81 data while the other one on 1980-81 and 1981-82 data). Geometric mean of the two values for each of the indices was used as the rates of promotees, repeaters and dropouts for reconstructing the cohort. It is assumed here that these rates over the years remained stable and pupils after three failures dropped out of school.

Reconstruction of the Cohort:

The cohort is reconstructed by assuming 1000 pupils instead of actual enrolment in Class I in the year 1979-80. The first diagonal row is obtained by multiplying the successive promotee rates for classes I, II, III and IV for the years 1979-80, 1980-81, 1981-82 and 1982-83. The repeater and dropout rates are then applied to obtain the second row. Again the same procedure, as adopted in the case of first diagonal row, is repeated for the second diagonal row; and so on. Pupils after three failure have been treated as dropped out of school. Also, the pupils who reach class V are considered as if they have completed the cycle. Reconstructing the cohort on the basis of 1000 instead of actual enrolment in class I helps in easier computation and further utilisation of findings in terms of percentages.

Flow diagrams indicating class to class [illegible] of a group of pupils entering class I have been prepared for different categories of pupils. In all, fifteen such flow diagrams for every state have been prepared of which five are given in Appendices. These flow diagrams have been used in calculating various indices given below:

i) Input/output ratio

ii) Overall dropout rate

iii) Output by number of repeating years

iv) Promotee profile

v) Percentage of pupil-years spent in excess

vi) Percentage of pupil-years spent in excess attributable to repeaters who completed the cycle

vii) Percentage of pupil-years spent in excess attributable to dropouts

viii) Excess pupil-years attributable to dropouts but effective.

Definition of terms:

The terms used in the preceding section are defined here.

Promotee Rate:

Promotee rate for a given class in a given year may be expressed as the ratio of promotees in the successive class of the successive year to the total enrolment of that class

in that year. Symbolically,

$$p^{c}_{y} = \frac{P^{c+1}_{y+1}}{E^{c}_{y}}$$

where p refers to promotee rate, P for pupils promoted, c for class, y for year, and E for enrolment.

Repeater Rate:

Repeater rate for a given class in a given year is the ratio of the number of repeaters of the same class in the successive year to the total enrolment of that class in that year.

Symbolically, $r^{c}_{y} = \frac{R^{c}_{y+1}}{E^{c}_{y}}$

where 'r' refers to repeater rate and R refers to number of repeaters.

Drop-out Rate:

Drop-out rate for a given class in a given year is the ratio of the number of pupils who dropped out in the same class in that year to the total enrolment of that class in that year. It may be obtained by subtracting from 1 the sum of promotee and drop-out rates.

$$d^{c}_{y} = 1 - (p^{c}_{y} + r^{c}_{y})$$

where 'd' refers to drop-out rate.

Input/output ratio:

This is the ratio of total pupil-years spent by a of pupils entering class I upto completing the cycle to the optimum pupil-years to be invested to complete the cycle. Input/output ratio gives an account of over-investment of educational resources due to repetition.

Overall Dropout Rate:

Overall dropout is the difference between the number of pupils entering class I and those who completed the cycle. The ratio of this difference to pupils who entered class I is known as "overall dropout rate".

Promotees Profile:

This profile shows the promotion of pupils from one class to another. With the help of this profile class to class transition rates can be worked out.

Percentage of Pupil-years spent in Excess:

Pupil-years spent in excess is the difference between pupil-years actually spent and optimum pupil-years required to complete the cycle. Dividing this difference by the total pupil-years actually spent and multiplying the resultant quotient by 100 would provide the percentage of pupil-years spent in excess.

Percentage of Pupil-years spent in Excess Attributable to Repeaters who completed the Cycle:

This is the percentage of excess pupil-years taken pupils who completed the cycle through repetion to the total pupil-years spent in excess.

Percentage of Pupil-years spent in Excess Attributable to Drop-outs:

This is the percentage of excess pupil-years attributable to dropouts to the total pupil-years spent in excess. It is obtained by subtracting from 100 the percentage of excess pupil-years attributable to repeaters who completed the cycle.

The last two indices explain that in what proportion the excess pupil-years were used by pupils who completed the cycle through repetition, or by pupils who dropped out.

Pupil-years Attributable to Dropouts but Effective:

It measures the relative benefit accuring from a proportion of excess pupil-years attributable to dropouts who left school after having been promoted at some stage. The pupils who drop out in class II, one year can be considered effective for them. Similarly, 2 and 3 years can be considered effective for those pupils who drop out in classes III and IV respectively.

CHAPTER - 3

Organisation of the Study

The Education Secretaries of the nine educationally backward states were approached to nominate a senior officer of the Directorate, preferably the one incharge of educational statistics. The nominee from each state was made responsible for executing the project in his state with the help of officers at the district and block levels. The names and addresses of the officers incharge of the states are given in Appendix.

A meeting of the officers incharge of the nine states was held at the NCERT headquarters to discuss the various issues pertaining to the sampling design for selection of schools, organisation of data collection, scrutiny of filled-in questionnaires and sample checking of data. The members of the project team also participated in the meeting.

The questionnaire already developed by the project team was discussed in the meeting and it was modified in the light of suggestions made by the participants. It was decided in the meeting that the questionnaire should be canvassed in the regional language of the state. However, the representatives of Jammu and Kashmir and West Bengal opted for the English version. While the state incharge was made responsible for getting the questionnaire translated into the regional language

and printed the same in sufficient number, the responsibility of printing the questionnaire in Hindi was entrusted to the NCERT.

The state representatives decided that the required data from the sampled schools should be collected through the Block Education Officers. The group was of the opinion that before distributing the questionnaires to the District/Block level Education Officers, school code numbers should be entered on the cover page of the questionnaires at the state headquarters itself. Besides, the names and addresses of the sampled schools should also be written in advance.

Role of Different Agencies:

NCERT:

The project team developed the design of the study and prepared tools for collection of data. The printing of questionnaires in Hindi was done at NCERT headquarters. The project team coordinated with the states in selection of blocks/towns, selection of schools, collection and scrutiny of data, and on the spot checking on 1% schools for correct and consistent information.

The analysis of data in respect of all the states was taken up at the NCERT for which the project team was made responsible. The data was computerised for all the states

except Andhra Pradesh and Uttar Pradesh. Computerisation of data was taken up in collaboration with the National Informatic Centre, Department of Electronics, New Delhi. The data of Andhra Pradesh and Uttar Pradesh were analysed Manually as the National Informatic Centre was to shift to its new promises and because of which they were unable to process the data of these states.

At the time of scrutiny certain inconsistencies were found in the data of many schools. It took a lot of time in getting these inconsistencies removed. In cases where inconsistency in the data could not be removed, the school forms were rejected.

State Level:

The officer incharge in the state supervised the project in his state. He got collected list of all recognised schools with primary classes from the selected blocks/towns. This list was used for selection of schools. School Code numbers were written on the questionnaires before sending them to the town/block level inspecting officers of the sampled towns/blocks. He was also responsible for getting back the filled-in questionnaires from them. Besides, he was required to organise on the spot checking of 10% school forms through District Statistical/Planning Assitant. He was also responsible for thorough scrutiny of questionnaires before despatching them to NCERT.

District Level:

District Inspecting Officer/School/District Education Officer/Basic Shiksha Adhikari was made responsible for getting the timely collection and scrutiny of filled-in forms with the help of block/town level inspecting officers. He was also made responsible for conducting 10% sample checking with the help of District Statistical/Planning Assistant.

Block/Town Level:

Block/town level inspecting officers were required to assist the officer incharge at the state level in collection of data from the selected schools. These officers were also responsible for proper scrutiny of the filled-in forms for complete, correct and consistent information.

Sample checking of Questionnaires:

A verification of 10% of sampled schools was done by the Statistical/Planning Assistant responsible for collection of educational statistics at the district level. They filled in the same questionnaires independently by visiting schools. These schools were selected using simple random sampling procedure. This verification was taken up only after the filled-in questionnaires from all the schools were received at the state headquarters.

About 1% of the total sampled schools from each state were randomly selected for the purpose of on the spot checking by the NCERT/state level officers.

CHAPTER 4

Some Indices of Stagnation and Dropouts in Different States

This chapter deals with the procedure of selection of schools from rural and urban areas along with schools covered under the study for each of the nine educationally backward states separately. It also covers discussions about the promotee, repeater and dropout rates and various indices of stagnation and dropouts.

ANDHRA PRADESH

The state of Andhra Pradesh came into being in 1953 on the partition of Madras and consisted of the undisputed Telugu-speaking area of that state. Nine Telugu-speaking districts of former Hyderabad were merged to it in 1956. It comprises now 23 districts and covers an area of 275068 sq. km. The total population of the state was 53549673 as recorded in the 1981 Census. Of these, 41062097 (76.68%) persons were residing in rural areas. The population of Scheduled Castes and Scheduled Tribes was 7961730 (14.87%) and 3176001 (5.93%) respectively. Among all the states and Union Territories Andhra Pradesh was fifth in the ranking according to its population size as well as by area occupied by the state. The density per sq.km. was 195. There were 975 females for every 1000 males.

The overall literacy rate of the state was 29.94% (for males 39.26% and for females 20.39%) as against all-India rate

of 36.23%. In rural areas only 23.24% persons were literate as compared to 51.99% in urban areas.

The state has long coastal line of about 960 km. Agriculture is the main occupation for about 74% of the people of Andhra Pradesh. According to Fourth All-India Educational Survey, there were 39696 primary, 4382 middle, 356 secondary and 312 higher secondary schools in the state. The number of schools with primary sections was 45122, of which 40720 were in rural areas.

About 96% of the population in rural areas had access to primary schooling facility upto a walking distance of 1 km. including 91.84% persons having the facility within the habitation itself. These percentages were higher than the corresponding all-India percentages. Slightly more than 60% of the children in the age-group 6 to below 11 years were enrolled in schools. The corresponding percentages for boys and girls were 69.86 and 50.03 respectively, which were quite smaller than the all-India percentages. This clearly indicates that nearly two-fifths of the children in the age group 6 to below 11 years were yet to bring in schools while schooling facility was available to 96% of the population.

Selection of Schools in Rural Areas

The state was divided into three regions namely Telangana, Coastal Andhra and Rayalaseema for selection of

schools in rural areas. From each region blocks were selected by adopting probability proportional to size (PPS) sampling with replacement, size being the number of schools with primary sections in the block.

In all 67 distinct blocks (10 tribal and 57 non-tribal) were selected. Of these, 22 blocks (3 tribal and 19 non-tribal) were from Telangana region, 34 blocks (7 tribal and 27 non-tribal) from Coastal Andhra and 11 non-tribal blocks from Rayalaseema. Three non-tribal blocks were got selected more than once. While one block each in Coastal Andhra and Rayalaseema got selected two times, one block in Telangana was selected three times. Thus the total number of sample blocks was 71.

From each selected block 13 schools were selected by using simple random sampling scheme. In the case of blocks having less than 13 schools, all were included into the sample. The total number of schools selected from rural areas was 853.

Selection of Schools in Urban Areas

The procedure for selection of schools in urban areas has already been discussed in Chapter 2. The same procedure has been followed here. Table 1.1 gives the number of towns selected from each category of towns along with

number of schools selected from these towns.

TABLE 1.1

Number of Towns along with Number of Schools Selected

Category of towns	No.of towns selected	No.of Schools selected
I	3	72
II	3	42
III	9	61
IV	6	41
V & VI	3	11

As stated in Chapter 2, 24 schools from each category I town , 16 schools from each selected category II town , 8 schools from each selected category III town and 4 schools from the remaining selected towns were selected. One town of category II and two towns of category III had less than the required number of schools to be selected from them. All schools from these three towns were included in the sample. In all 277 schools were selected from urban areas.

Schools covered for the Study

Although 1080 questionnaires in Telugu were canvassed in 853 schools in rural areas and 227 schools in urban areas

of Andhra Pradesh, only 746 of them were analysed-577 from rural and 169 from urban schools. The remaining questionnaires were either not received back from schools or rejected at the time of scrutiny due to incomplete/inconsistent information given in them. It was not possible to get the inconsistency in the data removed at that stage. Thus the results discussed in the subsequent sections are based on the data collected from 577 schools in rural and 169 schools in urban areas.

Promotee, Repeater and Dropout Rates

Promotee, repeater and dropout rates have been worked out as discussed in Chapter 2. These rates on different variables for All, SC and ST categories are given in Tables 1.2, 1.3 and 1.4 respectively. As is evident from these tables, classwise promotee rates are in ascending order, lowest for Class I and highest for class IV, for both boys and girls of SC, ST and all communities. A similar trend is observed in the case of rural and urban areas except for SC students in urban areas where promotee rate is slightly higher in class III than in class IV. The tables further reveal that promotee rate for each class is higher in urban schools than in rural ones.

Classwise repeater rates are highest in class I and gradually declines in higher classes. Interestingly, repeater rate for each class is higher in rural schools than in urban schools; only exception being class IV where only 17.16%

pupils repeated in rural schools as against 25.04% in urban schools. Another interesting observation is that more than one-third of the total pupils repeated class I itself. Repeater rate in class I is of the tune of 43.60% for ST 41.24% for SC and 35.51% for students of all communities. It is found to be the highest (45.84%) for ST girls and the lowest (19.57%) for total enrolment in urban schools.

There does not seem to be an appreciable difference in dropout rates of all pupils in different classes, highest being 19.13% in class II and lowest as 15.49% in class I.

Flow diagrams have been prepared on the basis of promotee, repeater and dropout rates given in Tables 1.2, 1.3 and 1.4 by using the same method as discussed in Chapter 2. The flow diagrams are given in Appendices.

Analysis of Efficiency

Input/output ratio, complemented by the overall dropout in an education system, measures the extent of educational wastage. The ratio is of the same order for boys and girls of all communities. It is higher for girls than for boys belonging to SC and ST categories. The

TABLE [illegible]

PROMOTEE, REPEATER AND DROPOUT RATES
FOR RURAL [illegible] COMMUNITIES

Sex/Area	Class	Promotee Rate	Repeater Rate	Dropout Rate
1	2	3	4	5
Boys	I	.5087	.3410	.1503
	II	.5876	.2207	.1917
	III	.6392	.1822	.1786
	IV	.6924	.1353	.1723
	V	-	.0919	-
Girls	I	.4682	.3715	.1603
	II	.5733	.2359	.1908
	III	.6403	.1978	.1619
	IV	.7121	.1595	.1284
	V	-	.1159	-
Total	I	.4900	.3551	.1549
	II	.5813	.2274	.1913
	III	.6377	.1898	.1736
	IV	.7005	.1455	.1510
	V	-	.1034	-
Rural	I	.4337	.4214	.1449
	II	.5334	.2884	.1782
	III	.5855	.2483	.1662
	IV	.6540	.1910	.1550
	V	-	.1148	-
Urban	I	.6251	.1957	.1792
	II	.6684	.1165	.2150
	III	.7247	.0877	.1876
	IV	.7669	.0800	.1531
	V	-	.0616	-

TABLE 1.3

Promotee, Repeater and Dropout Rates
for Scheduled Caste Pupils

Sex/Area	Class	Promotee rate	Repeater rate	Dropout rate
1	2	3	4	5
Boys	I	.4333	.3985	.1682
	II	.5435	.2390	.2175
	III	.6504	.2095	.1401
	IV	.6907	.1646	.1447
	V	-	.1053	-
Girls	I	.3937	.4275	.1788
	II	.5126	.3032	.1842
	III	.5487	.2063	.2450
	IV	.6395	.1691	.1914
	V	-	.1477	-
Total	I	.4149	.4124	.1727
	II	.5302	.2670	.2028
	III	.6080	.2075	.1845
	IV	.6717	.1689	.1594
	V	-	.1214	
Rural	I	.3840	.4538	.1622
	II	.5159	.2930	.1911
	III	.5667	.2463	.1870
	IV	.6487	.2058	.1455
	V	-	.1412	-
Urban	I	.5608	.2119	.2273
	II	.5711	.1814	.2175
	III	.7252	.1036	.1712
	IV	.7121	.1034	.1845
	V	-	.0905	-

TABLE 1.4

Promotee, R[illegible] and Dropout Rates
for Scheduled Tribe Pupils

Sex/Area	Class	Promotee Rate	Repeater Rate	Dropout Rate
1	2	3	4	5
Boys	I	.3858	.4182	.1960
	II	.4728	.3159	.2113
	III	.5550	.2236	.2214
	IV	.6174	.1929	.1897
	V	-	.1281	-
Girls	I	.4063	.4584	.1353
	II	.4199	.2872	.2929
	III	.5591	.2059	.2350
	IV	.6325	.1975	.1700
	V	-	.1377	-
Total	I	.3950	.4360	.1691
	II	.4505	.3032	.2463
	III	.5561	.2166	.2273
	IV	.6229	.1947	.1824
	V	-	.1319	-
Rural	I	.3[illegible]	.4579	.[illegible]
	II	.4569	.3346	.[illegible]
	III	.5864	.2352	.[illegible]
	IV	.6084	.1716	.[illegible]
	V	-	.1462	-
Urban	I	.4214	.3376	.[illegible]
	II	.4266	.1830	.[illegible]
	III	.4732	.1653	.3615
	IV	.6585	.2504	.0911
	V	-	.1076	-

T2.3 1.5

Input/Output [illegible] and Overall Dropout Rates

Sex 'Area	Input/Output ratio			Overall dropout rate		
	All	SC	ST	All	SC	ST
1	2	3	4	5	6	7
Boys	2.33	2.19	3.37	65.5	68.3	79.0
Girls	2.32	3.20	3.59	65.2	76.2	[illegible]
Total	2.33	2.74	3.47	65.4	71.5	[illegible]
Rural	2.69	1.90	2.33	69.1	73.0	[illegible]
Urban	2.96	2.21	2.71	61.3	61.7	84.5

internal efficiency is [illegible] especially in the ST students. This is mainly due to students dropping out from schools prematurely and also repeating classes.

Dropout at the primary stage is very alarming for all the pupils in general and SC and ST pupils in particular. It is the highest (84.5%) in the case of ST pupils in urban schools. Next in order comes ST girls with 78.8%. The dropout percentage is the lowest (61.3%) in the case of pupils of all communities in urban schools. Further, like input/output ratio, overall dropout rate is almost of the same order for both boys (65.5%) and girls (65.2%) of all communities.

Output by Number of Repeating Years

About one-third of the pupils completing the cycle did so without repeating. One-third repeated one year and the remaining pupils repeated two to three years. A similar trend is emerged in the case of boys and girls of all communities, SC boys and ST pupils in urban schools. It is further observed that the percentage of pupils(revise) completing the cycle without repeating is higher in the case of all communities as compared to pupils belonging to SC and ST

TABLE 1.6

Percentage Output by Number of Repeating Years

Category	Years repeated	Percentage Output				
		Boys	Girls	Total	Rural	Urban
1	2	3	4	5	6	7
All	0	34.5	31.0	33.2	25.2	50.3
	1	33.6	33.4	33.5	31.7	30.5
	2	20.8	[illegible]	21.4	25.3	10.3
	3	11.0	[illegible]	11.9	17.8	2.
SC	0	30.0	25.5	27.7	23.3	47.9
	1	33.1	31.8	32.6	31.1	33.2
	2	22.7	21.7	21.2	25.9	14.1
	3	14.2	18.0	15.5	19.7	4.8
ST	0	25.0	25.5	25.0	23.0	32.3
	1	31.8	31.6	31.9	31.0	31.2
	2	25.0	25.0	25.0	26.0	21.3
	3	18.2	18.9	18.1	20.0	12.2

categories. Areawise, these percentages are higher for pupils in urban schools than in rural ones. Slightly more than half of the pupils in urban schools completed the cycle

without repeating any class as against about one-fourth of them in rural schools.

Promotees Profile

Table 1.7 shows promotee profile of pupils of SC, ST and all communities in rural and urban schools. It is observed that about three-fourths of the pupils who join

TABLE 1.7

Promotees Profile

Category	Sex/Area	I	II	III	IV	V
1	2	3	4	5	6	7
All	Boys	1000	762	567	[illegible]	[illegible]
	Girls	1000	726	536	420	[illegible]
	Total	1000	748	555	429	[illegible]
	Rural	[illegible]	727	[illegible]	394	[illegible]
	Urban	1000	776	[illegible]	406	[illegible]
SC	Boys	[illegible]	702	[illegible]	[illegible]	[illegible]
	Girls	1000	665	472	[illegible]	[illegible]
	Total	1000	686	483	[illegible]	285
	Rural	1000	673	473	[illegible]	[illegible]
	Urban	1000	711	493	[illegible]	[illegible]
ST	Boys	1000	643	[illegible]	[illegible]	[illegible]
	Girls	1000	716	406	[illegible]	[illegible]
	Total	1000	675	421	[illegible]	[illegible]
	Rural	1000	[illegible]	[illegible]	[illegible]	225
	Urban	1000	[illegible]	326	[illegible]	155

class I reach class II . ... ..raining ... out.

This percentage is the highest (77.6%) among pupils of all communities in urban schools and the lowest (62.8%) in the case of ST pupils in urban schools.

It is further seen that slightly more th... ... - third of the pupils of all communities in class I complete the cycle and the remaining ones dropout in between. The percentage of pupils completing the cycle is the highest (38.7%) among pupils of all communities in urban schools and the lowest (15.5%) for ST pupils in urban schools.

Percentage of Pupil-Years Spent in Excess

Following table gives the pupil-years spent in excess and their percen... ... respect to total pupil-years invested by the ... ... completing ... ... This percentage is also an indicator of educational wastage. The higher the percentage more is the wastage. The table reveals that there is no noticeable difference between

CONTD..... -

Category	Item	Boys	Girls	Total	Rural	Urb
1	2	3	4	5	6	7
/be	Optimum pupil years to/invested	1725	1740	1730	1545	1935
	Total invested	4016	4027	4025	4 [illegible]	3679
All	Pupil-years spent in excess	2291	2287	2295	2606	1744
	% of pupil-years spent in excess	57.05	56.79	57.03	[illegible]	47.40
	Optimum Pupil-years to be invested	1585	1195	1425	1 [illegible]	1365
	Total invested	3937	3929	3890	[illegible]	3461
SC	Pupil years spent in excess	2352	2634	2174	2644	1896
	% of Pupil years spent in excess	59.74	68.7[illegible]	63.45	66.20	54.7[illegible]
	Optimum pupil years to be invested	1100	1060	1080	1175	775
	Total invested	3705	3804	3753	3962	3013
ST	Pupil years spent in excess	2605	2744	2673	2787	[illegible]
	% of pupil years spent in excess	70.31	72.13	71.22	70.34	7[illegible]

percentages for boys and girls of SC and all communities. However, this [illegible] among [illegible] boys. It is interesting to note that these percentages [illegible] for pupils of SC and all communities in rural [illegible] than the corresponding percentages in urban schools. The [illegible] is the highest (74.5[illegible]%) for ST pupils in urban [illegible] lowest (47.40%) for pupils of all communities in [illegible].

Attribution of the pupil-years spent in Excess

Category	Item	Boys	Girls	Total	Rural	Urban
1	2	3	4	5	6	7
All	Pupil-years spent in excess	2291	2287	2[illegible]	[illegible]	1[illegible]
	(a) Attributable to repeaters who completed the cycle	372 (1[illegible].24)	410 (17.9[illegible])	[illegible]7 ([illegible])	[illegible] ([illegible])	[illegible] ([illegible])
	(b) Attributable to dropouts	1919 (83.76)	1877 (82.07)	1[illegible] (83.1[illegible])	[illegible] ([illegible])	[illegible]
SC	Pupil years spent in excess	2352	2634	2[illegible]4	[illegible]	
	(a) Attributable repeaters who completed the cycle	384 (16.33)	323 (12.26)	[illegible] ([illegible])	[illegible] ([illegible])	
	(b) Attributable to dropouts	1968 (83.67)	2311 (87.74)	[illegible] ([illegible])	[illegible]	
ST	Pupil-years spent in excess	2605	2744	26[illegible]	[illegible]	
	(a) Attributable to repeaters whocompleted the cycle	300 (11.52)	293 (10.68)	29[illegible] (11.[illegible]0)	[illegible] ([illegible])	
	(b) Attributable to dropouts	2305 (88.48)	2451 (89.3[illegible])	[illegible] ([illegible])	[illegible]	

NOTE: Figures within parentheses indicate [illegible] respect to pupil-years spent in excess.

Pupil-years spent in excess are attributable to (a) those repeaters who completed the cycle and (b) the pupils who drop

out. Percentage of excess years due to dropouts is alarming for pupils of all th[illegible] in both [illegible] n scho It ranges from 82.07% for girls of all communiti s to 92.24% for SC pupils in urban schools.

Excess Pupil-years Attributable to Dropouts but [illegible]

Category	Boys	Girls	Total	[illegible]	[illegible]
1	2	3	4	5	6
All	73[illegible] (38.[illegible])	6[illegible]8 (3[illegible])	694 (36.[illegible])	7[illegible] ([illegible])	[illegible] ([illegible]5)
SC	6[illegible] ([illegible])	737 ([illegible])	675 ([illegible])	573 (2[illegible].09)	562 (3[illegible].9[illegible])
ST	707 (3[illegible].[illegible]7)	764 (3[illegible].17)	738 (31.02)	7[illegible]0 (3[illegible].01)	[illegible]71 (32.07)

NOTE: Figures within par[illegible] hes s indicat[illegible] percentage with respect to exces[illegible] [illegible]-y[illegible]rs attributable to dropouts

By and large, about one-third of the excess pupil-[illegible] attributable to dropouts may not be considered as tot[illegible] because of the fact that dropouts beyond Clas[illegible] I [illegible] least one or more years effectively before discontinuin[illegible] their studies.

Conclusions

From the [illegible] discussions it can be concluded that the state has a very high drop[illegible] [illegible] primary stage for all pupils [illegible] in particular.

There does not seem to be [illegible] input/output ratios for boys and girls of all communities whereas the ratios are higher for girls than [illegible] of SC and ST categories. The internal efficiency of the educational system is quite low particularly in the case of ST students. This is mainly due to students dropping out from schools prematurely and [illegible] classes.

Only about [illegible] the pupils [illegible] the cycle did so with[illegible] repeated one year [illegible] more [illegible] of the pupil-years [illegible] to dropouts, the remaining [illegible] to repeaters who completed the cycle.

The state of Assam consists of 17 districts covering an area of 78438 sq. km. The total population (projected)* of the state in 1981 was 1789 843. The density of population per sq. km. was 254. Among all the states and union territories its ranking was 13th by population, [illegible] by area occupied. There were 907 females for every 1000 males. Forests account for slightly more than one-fourth of the total area of the state.

According to the 1971 Census** the percentage of literate persons [illegible] was 28.15. The corresponding figures for males and females were 36.68% and 18.60% respectively. The literacy rate in rural areas was 25.24% as against 56.29% in urban areas.

There were 21603 primary, 3453 upper primary, 1679 secondary and 112 higher secondary schools [illegible] recorded in the Fourth All-India Educational Survey. The number of schools with primary sections in the state was 22450; of which 21496 (95.75%) were located in rural areas. Primary stage in Assam comprises classes I to IV.

---

* Actual population figures are not available in respect of Assam state as 1981 Census could not be conducted owing to disturbed conditions prevailing there at that time.

** Census of India, 1971, Series-3, Assam, Part I A General Report.

As per Fourth All-India Educational Survey the state had a provision of primary schooling facilities for 94.2% of its rural population within a walking distance of 1 km. including 81.34% persons who had the facility within the habitation itself. Further, 78.96% of the persons in rural areas were served by middle stage schooling facility within 3 km. But only 63.27% of the children in the age-group 6 to below 11 years and 37.91% in the age-group 11 to below 14 years were enrolled in schools. Obviously, the proportion of children enrolled in schools was much less than what it should have been, considering the availability of schooling facilities to them. The situation was even worse at the middle stage.

Selection of Schools in Rural Areas

In order to draw a representative sample of schools, rural areas of Assam were classified into two regions namely hilly districts and plain districts. Hilly districts consisted of tribal circles only whereas plain districts had both tribal and non-tribal circles. Plain districts were further divided into the regions namely tribal circles and non-tribal circles. Thus rural areas constitute three regions for sampling purposes. Here, circle instead of block was used as the primary sampling unit (PSU).

Probability proportional to size sampling with replacement (PPSWR) procedure was employed for selecting the requisite number of circles from each region; size being the number of schools with primary sections in the circle. In all 61 distinct circles were selected - 43 from non-tribal circles, 11 from tribal circles in plain area, and circles from hilly areas. Out of 16 circles 11 were selected twice. Thus the total number of circles selected from rural areas was 72.

Ten schools with primary sections were picked up from each selected circle by adopting simple random sampling without replacement (SRSWOR) procedure. Thus, 610 schools were selected from rural areas. However, the data in respect of 110 schools (from 11 circles included in the sample two times) were considered twice while analysing the data.

Selection of Schools from Urban Areas

All the urban areas in the state were treated as a single stretum for the purpose of selection of school from urban areas. Out of 1009 schools with primary sections, 250 were selected by employing SRSWOR procedure.

Schools Covered Under the Study

The analysis of the data was done in respect of 401 schools located in rural areas (300 non-tribal and 51 tribal) and 63 schools in urban areas. Forms from the remaining

schools were either not [illegible] or rejected [illegible] time of scrutiny due to incomplete/inconsistent information given in them.

Promotee, Repeater and Dropout Rates

Tables 2.1, 2.2 and 2.3 give the promotee, repeater and dropout rates, in respect of pupils in rural and urban schools and also for boys and girls separately for all communities, SC and ST categories respectively. It is evident from the tables that classwise promotee rates are in ascending order, lowest for class I and highest for class III, for all pupils of each category. A similar pattern is noticed in the case of boys and girls as well as for pupils in rural schools.

Repeater rate is quite high in class I for pupils of all communities as well as for those belonging to SC and ST categories. As many as 30.86% of the pupils of all communities repeated class I. The corresponding figures for SC and ST pupils were 33.87% and 51.24% respectively.

It is observed from the tables that in almost all classes dropout rates are lower than the respective promotee or repeater rates separately for boys and girls of each category. Furthermore, the dropout rates among SC and ST pupils are higher than the corresponding rates in pupils of all communities.

1

Promotee, Repeater and Dropout Rates
for Pupils of all Communities

Sex/Area	Class	Promotee rate	Repeater rate	Dropout rate
1	2	3	4	5
Boys	I	.4115	.3971	.1914
	II	.6570	.1957	.1573
	III	.7234	.2342	.0434
	IV	-	.1524	-
Girls	I	.4191	.3725	.2084
	II	.5974	.2921	.1105
	III	.8762	.123.	.0000
	IV	-	.1691	-
Total	I	.4141	.3886	.1973
	II	.6321	.2245	.1404
	III	.7758	.2242	.0000
	IV	-	.1565	-
Rural	I	.3962	.4005	.2033
	II	.6283	.2332	.1385
	III	.7862	.2138	.0000
	IV	-	.1624	-
Urban	I	.7556	.1612	.0812
	II	.7731	.1689	.1580
	III	.8742	.1075	.1258
	IV	-	.1111	-

TABLE 2.2

Promotee, Repeater and Dropout Rates
for Scheduled Caste Pupils

Sex/Area	Class	Promotee rate	Repeater rate	Dropout rate
1	2	3	4	5
Boys	I	.5096	.3475	.1429
	II	.6155	.1865	.1980
	III	.6172	.2162	.1650
	IV	-	.1941	-
Girls	I	.4832	.3233	.1935
	II	.6103	.2117	.1780
	III	.6361	.2121	.151[illegible]
	IV	-	.1781	-
Total	I	.5005	.3387	.1608
	II	.6137	.1949	.1[illegible]
	III	.6239	.2152	.1[illegible]
	IV	-	.1821	-
Rural	I	[illegible]	.[illegible]	.1779
	II	.5975	.1993	.2032
	III	.6043	.2242	.1715
	IV	-	.1897	-
Urban	I	.7003	.1967	.1030
	II	.7719	.1511	[illegible]
	III	.7739	.1475	.0786
	IV	-	.1394	-

TABLE 4.3

Promotee, Repeater and Dropout Rate for Scheduled Tribe Pupils

Sex/Area	Class	Promotee Rate	Repeater Rate	Dropout Rate
1	2	3	4	5
Boys	I	.3123	.5034	.1843
	II	.5691	.1962	.2347
	III	.6012	.2321	.1667
	IV	-	.1489	-
Girls	I	.3188	.5308	.1504
	II	.5571	.1975	.2454
	III	.5953	.2553	.1494
	IV	-	.1305	-
Total	I	.3145	.5124	.1731
	II	.5650	.1970	.2380
	III	.5992	.2395	.1613
	IV	-	.1439	-
Rural	I	.3123	.5431	.1446
	II	.5595	.1967	.2438
	III	.5967	.2400	.1633
	IV	-	.1457	-
Urban	I	.5592	.3807	.0601
	II	.7595	.2068	.0337
	III	.6507	.2565	.0928
	IV	-	.1041	-

Analysis of Efficiency

Table 2.4 gives input/output ratios and overall dropout rates for pupils of SC, ST and all communities in rural and urban areas. Input/output ratio is higher in the case of boys than girls of all communities. However, there does not seem to be any difference

Table 2.4

Input/output Ratio and Overall Dropout Rates

Sex/Area	Input/Output ratio			Overall dropout rate		
	All	SC	ST	All	SC	ST
1	2	3	4	5	6	7
Boys	1.83	2.08	2.72	51.3	55.4	69.3
Girls	1.74	2.06	2.80	46.8	57.1	67.6
Total	1.79	2.07	2.80	48.1	56.0	68.6
Rural	1.83	[illegible]		49.6	[illegible]	[illegible].3
Urban	1.56	1.41	1.62	38.4	28.7	31.5

among boys and girls belonging to SC and ST categories as far as internal efficiency of the system is concerned. Further, the ratio is higher for pupils of each category in rural schools than in urban schools. The internal efficiency is quite low among ST pupils particularly in rural schools.

About 48% of the total pupils of all communities dropped out before completing the cycle. Overall dropout rate

order
was of higher/for both boys and girls belonging to ST category as compared to [illegible] SC and all [illegible]. It is evident from the table that the overall dropout rate among pupils of each category in rural schools is much higher than that in urban schools. It is the highest among ST boys (69.3%) and ST pupils in rural schools (69.3%) and the lowest among SC pupils in urban schools (28.7%).

Output by Number of Repeating Years

It is observed from Table 2.5 that about one-third of the pupils of SC and all communities who completed the cycle did so without repeating any class, next one-third repeated one year and the remaining pupils repeated more than one year.

TABLE 2.5

Percentage Output by Number of Repeating Years

Category	Years repeated	Percentage output				
		Boys	Girls	Total	Rural	Urban
1	2	3	4	5	6	7
All	0	33.88	34.21	33.14	32.54	52.11
	1	32.85	32.71	32.95	32.74	31.66
	2	20.74	20.49	21.00	21.23	12.01
	3	12.53	12.59	12.91	13.49	4.22
SC	0	35.43	36.13	35.68	34.65	50.43
	1	33.18	33.10	33.18	32.92	31.86
	2	19.73	19.58	19.78	20.05	12.76
	3	11.66	11.19	11.36	12.38	4.77
ST	0	29.64	28.39	29.30	28.99	30.20
	1	31.92	31.79	31.53	31.60	33.29
	2	22.48	23.15	22.93	23.13	19.56
	3	15.96	16.67	16.24	16.28	10.95

A similar trend is visible in the case of pupils in rural schools. However, pr[illegible] ST pupils [illegible] the cycle without repeating was slightly less than 30%. This percentage was the highest among pupils in urban schools.

Promotees Profile

Table 2.6 shows promotees profile of pupils of SC, ST and all communities in rural and urban areas. The table reveals that about two-thirds of all boys

TABLE 2.6

Promotees Profile

Category	Sex/Area	I	II	III	IV
1	2	3	4	5	6
All	Boys	1000	666	529	[illegible]
	Girls	1000	655	535	5[illegible]
	Total	1000	662	532	[illegible]19
	Rural	1000	645	517	504
	Urban	1000	902	735	616
SC	Boys	[illegible]	770	[illegible]	446
	Girls	1000	705	539	429
	Total	1000	748	564	440
	Rural	1000	718	529	404
	Urban	1000	871	789	713
ST	Boys	1000	588	407	307
	Girls	1000	626	425	324
	Total	1000	600	41[illegible]	314
	Rural	1000	595	405	307
	Urban	1000	884	835	685

as well as 'all girls' and 'all-total' who joined class I reached class II and the remaining one-third dropped out. This percentage is higher among pupils in urban schools than i rural ones. It is the highest (90.2%) among pupils of all communities in urban schools.

Percentage of Pupil-Years spent in Excess

Pupil-years spent in excess along wit their percentage with respect to total pupil-years invested are given in the foll w ng table. The table reveals that the percentage of pupil-years spent in excess

Category 1	Item 2	Boys 3	Girls 4	Total 5	Rural 6	Urban 7
All	Optimum pupil-years to be invested	1948	2128	2076	2016	2464
	Total invested	3661	3698	3709	3680	3836
	Pupil-years spent in excess	1713	1570	1633	1664	1372
	% of pupil-years spent in excess	46.79	42.46	44.03	45.22	35.77
SC	Optimum pupil-years to be invested	1784	1716	1760	1816	2052
	Total invested	3704	3529	3642	3549	4013
	Pupil-years spent in excess	1920	1813	1882	1933	1961
	% of pupil-years spent in excess	51.84	51.37	51.67	54.47	48.83
ST	Optimum pupil-years to be invested	1228	1296	1256	1228	2710
	Total invested	3465	3634	3520	3502	4430
	Pupil-years spent in excess	2237	2338	2264	2274	1590
	% of pupil-years spent in excess	64.56	64.34	64.32	64.93	38.15

is higher for 'all boys' than for 'all girls'. However, no difference appears in the two percentages of SC and ST categories. This percentage is the highest among ST pupils and the lowest among pupils of all communities. Further, there is an appreciable difference between the percentages in rural and urban areas. The percentages are higher in the case of rural areas.

Attribution of the Pupil-Years Spent in Excess

Category	Item	Boys	Girls	Total	Rural	Urban
1	2	3	4	5	6	7
All	Pupil-years spent in excess	1713	1570	1633	1660	1372
	a) Attributable to repeaters who completed the cycle	545 (31.82)	593 (37.77)	590 (36.13)	579 (35.04)	421 (30.69)
	b) Attributable to dropouts	1168 (68.18)	977 (62.23)	1043 (63.87)	1081 (64.96)	951 (69.31)
SC	Pupil-years spent in excess	1930	1813	1882	1933	1161
	a) Attributable to repeaters who completed the cycle	480 (25.00)	454 (25.04)	470 (24.97)	445 (23.02)	512 (44.10)
	b) Attributable to dropouts	1410 (75.00)	1359 (74.96)	1412 (75.03)	1488 (76.98)	649 (55.90)
ST	Pupil-years spent in excess	2237	2338	2264	2274	1690
	a) Attributable to repeaters who completed the cycle	383 (17.12)	415 (17.75)	396 (17.49)	389 (17.11)	611 (39.15)
	b) Attributable to dropouts	1854 (82.88)	1923 (82.25)	1868 (82.51)	1885 (82.89)	1079 (63.85)

NOTE: Figures within parentheses indicate percentages with respect to pupil-years spent in excess.

Although, the percentage of pupil-years spent in excess attributable to dropouts is quite high for boys and girls of all communities, it is more acute for SC and ST pupils These percentages for SC and ST categories are about 75% and over 82% respectively.

Excess Pupil-years Attributable to Dropouts but Effective

Category	Boys	Girls	Total	Rural	Urban
All	221 (18.92)	129 (13.21)	156 (14.96)	154 (14.25)	405 (42.59)
SC	455 (31.60)	386 (28.41)	432 (30.60)	439 (29.51)	234 (36.06)
ST	381 (20.55)	403 (20.96)	385 (20.61)	386 (20.48)	349 (32.35)

NOTE: Figures within parentheses indicate percentages with respect to excess pupil-years attributable to dropouts.

Excess pupil-years attributable to dropout may not be considered as the total wastage because the pupils dropped out after passing class I utilised at least one year effectively. The above table shows that the percentage of excess pupil-years attributable to dropouts but effective is higher in the case of SC pupils. Next in order comes ST pupils. Further, this percentage is higher among pupils in urban schools than their counterparts in rural schools.

Conclusions

Overall dropout rate at the primary stage is quite high for all pupils particularly for those belonging to Scheduled Tribes. The data reflects an appreciable difference in the dropout rates for pupils in rural and urban schools, the rates being higher in rural schools.

Input/output ratio is higher for boys than for girls of all communities. However, no difference appears in the ratios for boys and girls of SC and ST categories. These ratios are higher in rural schools than in urban ones. The internal efficiency is quite low among pupils belonging to Scheduled Tribes particularly in rural schools.

While the percentage of pupil-years spent in excess is higher for boys than for girls of all communities, there does not seem to be any difference in the two percentages for SC and ST categories. The percentage of pupil-years spent in excess attributable to dropouts is quite high for all pupils, especially for SC and ST pupils.

BIHAR

The state of Bihar is made up of 31 districts with an area of 1,73,876 sq. km. . It had a population of 6,99,14,734. Though its area was ranked 9th in the country it was the second most populous state in the country having population density of 407 per sq. km. as per 1981 Census. There were 14.51% scheduled Castes and 8.31% scheduled Tribes in the state.

The state has one of the most fertile agricultural land in the country as number of rivers flow through the state the chief among them being Ganga. The state has large amount of minerals and forest resources. It has many large scale and small scale industries. Insnite of this the per capita income of the state is Rs.995 as against the national per capita income of Rs. [illegible] t 36.0 [illegible] people of rural areas in the state are below the poverty line.

The literacy rate of the state was 26.20% which ranked 28th in the country. Although 87.5% population of the state lived in rural areas, the literacy rate in rural areas was (22.50%) as against 52,18% in urban areas. Again there was a considerable difference between males (38.11%) and females (13.62%) literates.

After independence concerted efforts have been made to increase primary education as a result of which primary schooling facilities, have become available in vast rural areas. According to Fourth All-India Educational Survey, 77.9% population in rural areas had primary schooling facilities within the habitation while 95.54% rural population had this facility within a walking distance of 1 km. This shows that the facility of primary education was available almost on universal basis. But still only 54.37% children of the age group 6 to below 11 were enroled in schools. In the age group 11 to below 14 years only 25.90% children were enrolled in schools. This indicatesthat a large number of children who do join schools at primary stage leave schools before reaching middle stage. Thus it becomes important to measure the extent of dropouts at primary stage so that means and ways can be found out to arrest it. In consequence to this, a study on sample basis has been taken up in 800 primary schools/sections in rural areas and 200 primary schools/sections in urban areas.

Selection of schools from Rural Areas

The state for this purpose was divided into 10 regions. Each region was further sub divided into tribal and non tribal areas known as sub-stratum. Then the allocation of blocks was made to each sub-stratum using proportional allocation. From each sub-stratum blocks were selected using probability proportional

to size sampling scheme with replacement, size being the number of schools in the block. Then from each block 10 schools were selected using simple random sampling without replacement sampling scheme. The number of blocks selected from each region is given below.

S.No.	Region	No.of Rural Blocks selected	
		Tribal blocks	Non tribal blocks
1.	Patna	-	9
2.	Magadh	-	6
3.	Saran	-	5
4.	Tirhut	-	9
5.	Darbhanga	-	6
6.	Koshi	-	7
7.	Santhal Parganas	4	-
8.	Bhagalpur	-	7
9.	North Chotanagpur	-	7
10.	South Chotanagpur	13	-
	Total	17	53

In the above selection as we have used probability proportional to size, with replacement, sampling scheme 73 blocks got selected insted of 80 as 7 blocks were selected twice.

Selection of Schools From Urban Areas

For selection of schools from urban areas the state was divided into 5 categories of cities/towns viz. I, II, III, IV

V & VI. Then number of towns to be selected from e[illegible] were allocated. Total number of towns selected was 22. These towns were selected using probability proportional to size with replacement sampling scheme. Here the size being the population of the town/city. The number of towns got selected from category I was [illegible] category II 3, category III 6, category IV 6 and from category V and VI 4. Then schools were selected using simple random sampling ~~scheme~~ without replacement scheme. The total number of schools got selected in urban areas was 252.

Schools Covered Under the Study

After scrutiny and validation of data estimates of promotees, repeaters and dropouts were calculated on the basis of schools given below.

S.No.	Region	No.of Schools covered in rural areas	
		Tribal	Non-Tribal
1.	Patna	-	90
2.	Magadh	-	59
3.	Saran	-	49
4.	Tirhut	-	70
5.	Darbhanga	-	60
6.	Koshi	-	70
7.	Santhalparganas	40	-
8.	Bhagalpur	-	70
9.	North Chotanagpur	-	70
10.	South Chotanagpur	130	-
	Total	170	538

In case of urban areas total schools covered were 196 instead of 252 schools allocated.

Promotees, Repeaters and Dropout Rates

Table 3.1, 3.2 and 3.3 gives promotee, repeater and dropout rates of children belonging to all communities 'All', scheduled castes (SC) and scheduled tribes (ST) seperately for boys, girls and total (boys+girls) and also for rural and urban areas. These rates have been calculated on the basis of 708 rural schools and 196 urban schools. These tables reveal that promotees rate increases between class I and class IV amongst 'All', SC and ST pupils. In case of rural areas trend is same but in urban areas amongst SC students it decreases in class II and then increases in class IV and amongst ST pupils it decreases in class III and then increases in class IV. No trend is visible between promotee rates of boys and girls for 'All' and SC students. But in case of ST pupils it is higher for boys in all classes as compare to girls in corresponding classes. In urban areas amongst 'All' promotee rates are higher to that of rural areas in classes I, II and III. But in class IV promotee's rate in rural areas is higher as compared to urban areas. Among SC and ST pupils, no trend is visible in promotee rates of rural and urban areas.

The repeaters rate for different classes do not follow any trend in any category. But in class I it is higher than other classes amongst children of all the categories and also in rural and urban areas.

The dropout rates also do not follow any trend but it is interesting to note that it is almost evenly distributed in all classes amongst all the categories and also in rural and urban areas. In case of scheduled caste students dropout in urban areas is higher than that of pupils of rural areas all classes.

TABLE 3.1

Promotees, Repeaters and Dropout Rates
for pupils of all communities

SEX/AREA	CLASS	PROMOTEE RATE	REPEATER RATE	DROPOUT RATE
1	2	3	4	5
Boys	I	0.4342	0.4138	0.1520
	II	0.6118	0.1955	0.1927
	III	0.6887	0.1977	0.1135
	IV	0.8069	0.1185	0.0748
	V	-	0.0955	-
Girls	I	0.4342	0.3921	0.1734
	II	0.6405	0.1763	0.1832
	III	0.6566	0.2017	0.1417
	IV	0.7571	0.1249	0.1180
	V	-	0.0933	-
Total	I	0.4343	0.4073	0.1584
	II	0.6204	0.1897	0.1899
	III	0.6790	0.1989	0.1221
	IV	0.7926	0.1203	0.0871
	V	-	0.0949	-
Rural	I	0.3833	0.4448	0.1719
	II	0.5[illegible]3	0.2367	0.1791
	III	0.6677	0.2169	0.1154
	IV	0.8291	0.1333	0.0376
	V	-	0.1051	-
Urban	I	0.5465	0.3254	0.1291
	II	0.6783	0.1301	0.1066
	III	0.6930	0.1754	0.1315
	IV	0.7517	0.1057	0.1[illegible]
	V	-	0.0830	-

TABLE 3.2

Promotees, Repeaters and Dropout Rates for Scheduled Caste Pupils

SEX/AREA	CLASS	PROMOTEE RATE	REPEATER RATE	DROPOUT RATE
1	2	3	4	5
Boys	I	0.1726	0.3899	0.1375
	II	0.6208	0.1718	0.2074
	III	0.6771	0.1087	0.2142
	IV	0.7513	0.1044	0.1443
	V	-	0.0758	-
Girls	I	0.4522	0.3783	0.1695
	II	0.6099	0.1481	0.2420
	III	0.6831	0.1042	0.2127
	IV	0.7524	0.0875	0.1601
	V	-	0.1198	-
Total	I	0.4683	0.3881	0.1437
	II	0.6184	0.1668	0.2148
	III	0.6784	0.1078	0.2138
	IV	0.7515	0.1011	0.1474
	V	-	0.0894	-
Rural	I	0.4210	0.4527	0.1263
	II	0.6410	0.2043	0.1547
	III	0.7005	0.1341	0.1564
	IV	0.7651	0.1224	0.1125
	V	-	0.0894	-
Urban	I	0.5885	0.2262	0.1853
	II	0.5783	0.0994	0.3223
	III	0.6170	0574	0.3256
	IV	0.7227	0.0553	0.2220
	V	-	0.0758	-

TABLE 3.3

Promotees, Repeaters and Dropout Rates for Scheduled Tribe Pupils

SEX/AREA	CLASS	PROMOTEE RATE	REPEATER RATE	DROPOUT RATE
1	2	3	4	5
Boys	I	0.3374	0.4852	0.1774
	II	0.5853	0.2652	0.1495
	III	0.6970	0.1999	0.1031
	IV	0.7460	0.1438	0.1102
	V	-	0.1445	-
Girls	I	0.2482	0.5443	0.2075
	II	0.5778	0.2846	0.1376
	III	0.6157	0.2170	0.1673
	IV	0.6716	0.1980	0.1304
	V	-	0.1576	-
Total	I	0.3103	0.5032	0.1865
	II	0.5834	0.2700	0.1466
	III	0.6765	0.2044	0.1191
	IV	0.7296	0.1558	0.1141
	V	-	0.1473	-
Rural	I	0.2905	0.5335	0.1760
	II	0.5518	0.2759	0.1723
	III	0.6798	0.2290	0.0912
	IV	0.6979	0.1592	0.1429
	V	-	0.1679	-
Urban	I	0.4795	0.2467	0.2738
	II	0.8906	0.0434	0.0660
	III	0.8692	0.1043	0.0265
	IV	0.8461	0.1186	0.0353
	V	-	0.0920	-

Although promotee rates do not differ amongst 'All' SC and ST. Table 3.4 indicates that number of promotees is higher amongst boys as compared to girls in all classes and in all categories. In rural and urban areas for 'All' and ST, promotees are higher in urban areas as compared to rural areas in all the classes. But in case of SC except in class I, promotees are higher in rural areas as compared to urban areas.

TABLE 3.4

Promotees Profile

Category	Sex/Area	Classes				
		I	II	III	IV	V
All	Boys	1000	719	537	453	407
	Girls	1000	697	535	433	369
	Total	1000	712	537	446	396
	Rural	1000	[illegible]	495	411	385
	Urban	1000	[illegible]	610	[illegible]	[illegible]
SC	Boys	1000	756	560	422	352
	Girls	1000	712	506	383	313
	Total	1000	747	548	414	343
	Rural	1000	737	584	473	409
	Urban	1000	758	486	316	241
ST.	Boys	1000	619	476	407	343
	Girls	1000	497	363	289	232
	Total	1000	585	448	370	311
	Rural	1000	573	426	359	289
	Urban	1000	633	573	426	405

Again we note that the Table reveals that in rural areas more SC students (408) complete the cycle as compared to 'All' (385) and ST(289). In urban areas ST students have performed better than SC students. In case of boys, less ST boys have completed the cycle as compared to SC and 'All' in this order. The same trend is found in case of girls.

From these rates class to class movement of cohort of students entering class I have been prepared which are given in appendix. With the help of cohorts different indicators of wastage and stagnation have been calculated which are discussed below.

Input/Output and Overall Dropout Rates

Input/Output ratio gives the extent of resources overemployed in an educational system than the minimum required while overall dropout rates give the percentage of pupils who have completed the cycle [illegible] ion to the [illegible] r the cycle in class I.

Sex/Area	Input/output ratio			Overall dropout rates		
	All	SC	ST	All	SC	ST
Boys	2.17	2.26	2.38	59.30	64.80	65.70
Girls	2.16	2.48	3.23	63.10	68.70	76.30
Total	2.07	2.29	2.56	60.40	65.70	68.90
Rural	2.12	2.24	2.77	61.50	59.20	71.10
Urban	1.95	2.69	1.82	57.80	75.90	59.50

From this table it is clear that the wastage of resources is maximum in case of 'All' girls where 223% more resources have been overemployed. In rural areas the wastage of resources is maximum in ST where 177% more resources have been overemployed as compared to 'All' (112%) and ST(124%). In urban areas more resources invested in case of SC(169%), All (95%) and ST(82%). The overall dropout rates for boys among all categories are lower than that of girls in corresponding categories and are higher in rural areas amongst 'All' and ST in comparison to urban areas. The situation is reverse in case of SC students, dropouts being higher in urban areas as compared to rural areas.

Percentage of Output by Number of Repeating Years

This indicator gives us the percentage of students who have completed the cycle without repeating any class or those who have completed the cycle after repeating in one or more than one classes.

Category	Years	Percentage output				
		Boys	Girls	Total	Rural	Urban
All	0	32.68	33.88	33.08	29.83	41.47
	1	33.42	33.60	33.59	32.47	33.65
	2	21.38	20.87	21.21	23.38	17.06
	3	12.53	11.65	12.12	15.32	17.82
SC	0	39.20	39.94	39.07	32.84	58.09
	1	33.24	33.23	33.53	33.09	29.46
	2	18.47	17.57	18.37	21.32	9.54
	3	9.09	9.27	9.04	12.75	2.90
ST	0	25.66	21.55	24.44	22.15	42.47
	1	31.78	30.17	31.19	30.45	33.58
	2	24.49	26.29	25.08	25.95	16.64
	3	18.08	21.98	19.29	21.45	7.41

The above table reveals that only about one-third of pupils completed the cycle without repetition, one-third repeated for one year and the remaining repeated for two or three years. This is true for students of all the categories as well as of rural areas but in case of urban areas about 42% pupils complete the cycle in the first attempt while about 34% complete the cycle after repeating for one year. It is interesting to note that in urban areas more pupils amongst SC (41.09) and ST(42.47) complete the cycle as compared to [illegible] 1.47).

Percentage of Pupil Years Spent in Excess

This table gives the number of pupil-years spent in excess than normally required. These have been calculated

on the assumption that [illegible] of the system [illegible] required repetition.

Category	Item	Boys	Girls	Total	Rural	Urban
All	Optimum pupil years to be invested	2035	1845	1969	1925	2111
	Total invested	4409	3991	4097	4085	4121
	Pupil-years spent in excess	2371	2146	2117	2160	2011
	%of pupil years spent in excess	53.84	53.77	51.67	52.88	48.80
SC	Optimum pupil years to be invested	1760	1565	1715	2040	1206
	Total invested	3972	3876	3924	4570	3239
	Pupil years spent in excess	2212	2311	2209	2530	2034
	%of pupil years spent in excess	55.69	59.62	56.29	55.36	62.80
ST	Optimum pupil years to be invested	1715	1160	1555	1445	2025
	Total invested	4076	3748	3983	4008	3695
	Pupil years spent in excess	2361	2588	2428	2564	1670
	% of pupil years spent in excess	57.92	69.05	60.96	63.95	45.20

The above table also shows that percentage of pupil years spent in excess is less in case of 'All' as compared to SC and ST. The percentage of pupils years spent in excess is more in rural areas as compared to urban areas in case of 'All'

and ST while for SC, percentage of pupil years spent in excess is less in rural areas as comparedto urban areas.

Attribution of Pupil-Years Spent in Excess

The pupil-years spent in excess can either be due to (i) repeaters who have completed the cycle after repetition (ii) or due to dropouts. In this table the years attributed to these two categories have been discussed.

Category	Item	Boys	Girls	Total	Rural	Urban
All	Pupil-years spent in excess	2374	2146	2117	2160	2011
	i) Attributable to repeaters who have completed the cycle	463 (19.50)	407 (18.97)	445 (21.02)	482 (22.31)	384 (19.14)
	ii) Dropouts	1911 (80.50)	1739 (81.03)	1672 (78.98)	1678 (77.69)	1626 (80.86)
SC	Pupil years spent in excess	[illegible]	2311	2209	2530	2034
	i) Attributable to repeaters who have completed the cycle	343 (15.51)	301 (13.02)	334 (15.12)	465 (18.38)	138 (6.78)
	ii) Dropouts	1869 (84.49)	2010 (86.98)	1875 (84.88)	2065 (81.62)	1896 (93.22)
years	Pupil/spent in excess	2361	2588	1875	2065	1896
ST	i) Attributable to repeaters who have completed the cycle	463 (19.61)	345 (13.33)	433 (17.83)	424 (16.54)	360 (21.56)
	ii) Dropouts	1898 (80.39)	2243 (86.67)	1995 (83.17)	2139 (83.46)	1310 (78.44)

This table reveals more pupil-years have been spent for girls dropout amongst SC and ST children. While in case of 'All', more pupil-years have been spent on boys dropout. Again the table reveals that more pupil-years have been spent on rural dropouts as compared to urban dropouts.

Excess Pupil-Years Attributable to Dropouts but Effective

The dropouts could either be those who have left schools even before completing one year of study or those who have discontinued after passing out at least class I. This table gives the pupil-years attributed to those drop-outs who have studied atleast for a year.

Category	Boys	Girls	Total	Rural	Urban
All	[illegible] (25.[illegible])	[illegible] (3[illegible].09)	507 (30.32)	414 (24.67)	255 (15.68)
SC	682 (36.49)	612 (32.03)	680 (36.27)	570 (27.60)	837 (44.15)
ST	468 (24.71)	473 (21.09)	470 (23.56)	491 (22.95)	417 (31.83)

We note that more-pupil years were effective in case of 'All' girls. This is reversed in case of SC and ST pupils where more pupil years were effective in case of boys. Similarly more

pupil years were effective 'All' rural in comparison to 'All urban. While in case of SC and ST more pupil years were effective in case of urban areas.

Conclusion:

The state has a high dropout rate with more than 50% pupils dropping out before completing primary stage among all the categories of children. It is also noted that girl drop-outs are more in comparison to boys and also dropout is more among rural children in comparison to urban children with the exception in case of Scheduled Caste where dropout is higher among urban pupils in comparison to rural pupils. Again stagnation in the state is also very high with only about one-third children completing the cycle without repetition.

The internal efficiency of system is quite low. The low internal efficiency with high dropout and stagnation result into high amount of wastage.

JAMMU & KASHMIR

The state of Jammu and Kashmir covers an area of 2,22,236 sq. km. (provisional) and is divided into 14 districts. According to 1981 Census the population of the state was 59,87,389, of which 79.95% of population were residing in rural areas. There were no scheduled tribes in the state and the scheduled caste population was 4,97,363, which constituted 8.31% of the total population of the state. Its population ranking was 17th, while areawise it was ranked 6th in the country. The density of population per sq- km. in the state was 59.

The state is predominantly agricultural. The peasants supplement their income by Silk Worm rearing, bee-keeping, sheep rearing, basket making and by weaving woolen tweeds & blankets. The main cottage industries of the state are making of shawls, carpets, wood carving and metal work. The per capita income of the state was Rs.1630 in 1981-82 as compared to national per capital income of Rs.1750. The state had 1.54 million people below poverty line in rural areas during 1981 which constituted 32.6% of the rural population in the state.

The state had a very low literacy rate of 26.67%. It was still worse in case of females (15.88%) as compared to males (36.29%). The corresponding figures for India were

36.23%, 24.82% and 46.89%. Although about 79% population lived in rural areas, literacy rate of rural areas was 21.63 as compared to 45.56 in urban areas.

The Fourth All-India Educational Survey (1978) had revealed that the state had a provision of primary schooling facilities to 74.66% rural population within the habitation. This facility was available to 89.94% population within a walking distance of 1 km. In the Fifth All-India Educational Survey the facilities increased to 78.23% rural ponulation within habitation and to 90.70% within a walking distance of 1 km. Although a majority of population had primary schooling facility within a walking a distance of 1 km. only 58.33% of the children in the age group 6 to below 11 years were in schools.

Selection of Schools from Rural Areas

The state was divided into two regions namely Jammu and Kashmir (which included Kashmir Valley and Ladakh). From each region 28 blocks were selected using probability proportional to size sampling with replacement, size being the number of primary schools/sections in the block. From each selected block 12 schools were selected using simple random sampling without replacement (SRSWOR). Here blocks form the first stage of sampling and schools the second stage

of samoling. The number of blocks and schools selected from each region are as given below.

Number of Blocks and Schools Selected

S.No.	Region	Total No. blocks	No. of blocks selected	No. of schools selected per block	Total No. schools selected
1.	Jammu	16	28	12	300
2.	Kashmir Valley	26	25	12	264
3.	(ii)Laddakh	5	3	12	36
	Total	187	56	12	[illegible]

In case of both Jammu and Kashmir regions 25 districts blocks were selected. In case of Jammu 3 blocks were selected twice while in case of Kashmir one blocks was thrice and one block was selected twice. [illegible] has been selected more than once will be counted as many times as it has been selected for the purpose of estimation. In this state regions were not divided further into tribal and non-tribal as there was no scheduled tribe population in the state.

Selection of Schools from Urban Areas

In case of urban areas, towns/cities were selected as a first stage sampling unit. These were selected using

probability proportional to size sampling, size here being the population of the town city. In this state for selection of towns/cities also, each region of Jammu and Kashmir was treated as a separate region. The selection of schools in each town/city was done using simple random sampling procedure. The number of towns/cities selected from each category and schools selected from them are given below.

Number of Towns and Schools Selected

Category	No. of towns selected	No. of schools selected
I	2	18
II*	-	-
III	5	40
IV	5	37
V and VI	8	47
Total	20	172

*There is no town in this category in this state.

Schools Covered under the Study

After scrutiny of the questionnaires and validation of the data estimates of promotees, repeaters and drop-out

rates were calculated on the basis of schools:

Region/ Category of town	Schools covered	
	Rural	Urban
Jammu	200	-
Kashmir	270	-
Class I	-	48
Class II	-	-
Class III	-	39
Class IV	-	35
Class V and VI	-	

Promotees, Repeaters and Dropouts

Table 4.1 and 4. give the promotee, repeater and drop-out rates for children belonging to all communities 'All' and scheduled castes (SC) separately for boys, girls and total (boys + girls) and also for rural and urban areas. These rates have been calculated on the basis of 560 schools covered in the study from rural areas and 165 schools from urban areas. These tables reveal that in case of 'All' promotees rate for boys is higher than that of girls in classes I and II. But there is not much difference between promotees rates of boys and girls in any class amongst SC

students. The promotees rate of pupils studying in rural and urban areas also do not differe appericiably in any class. In all the categories the promotees rate increases from class I to class III and then goes down in class IV though only marginally. The only exception is SC girls, where it decreases in class III and increases in class IV. The promotees rate is higher in all classes in urban areas than in rural areas.

The repeater rates for different classes do not follow any trend both amongst pupils of SC and 'All' in rural and urban areas. But it is higher in all classes in schools of rural areas as compared to corresponding classes in urban schools.

TABLE 4.1

PROMOTEE, REPEATER AND DROPOUT RATES

STATE: JAMMU AND KASHMIR CATEGORY: ALL

SEX/AREA	CLASS	PROMOTEE RATE	REPEATER RATE	DROPOUT RATE
1	2	3	4	5
Boys	I	0.7771	0.0588	0.1641
	II	0.7176	0.1045	0.1779
	III	0.8436	0.1049	0.0515
	IV	0.8430	0.1112	0.0458
	V	-	0.0959	-
Girls	I	0.3890	0.0353	0.5757
	II	0.5543	0.0782	0.3675
	III	0.8179	0.0877	0.0944
	IV	0.7763	0.0660	0.1577
	V	-	0.0599	-
Total	I	0.5891	0.0475	0.3634
	II	0.6558	0.0946	0.2496
	III	0.8399	0.1007	0.0594
	IV	0.8[illegible]	0.0962	0.0790
	V	-	0.0853	-
Rural	I	0.5538	0.0517	0.3945
	II	0.5913	0.1104	0.2983
	III	0.8161	0.1006	0.0833
	IV	0.7762	0.1033	0.1205
	V	-	0.0954	-
Urban	I	0.6382	0.0275	0.3347
	II	0.8038	0.0516	0.1446
	III	0.8787	0.0932	0.0281
	IV	0.8919	0.0834	0.0247
	V	-	0.0701	-

TABLE 4.2

PROMOTEE, REPEATER AND DROPOUT RATES

STATE: JAMMU & KASHMIR. CLASS

SEX/AREA 1	CLASS 2	PROMOTEE RATE 3	REPEATER RATE 4	DROPOUT RATE 5
Boys	I	0.7530	0.0193	0.2277
	II	0.8386	0.0685	0.0929
	III	0.8388	0.1141	0.0471
	IV	0.7312	0.0874	0.1814
	V	-	0.0885	-
Girls	I	0.7245	0.0223	0.2532
	II	0.7927	0.0916	0.1157
	III	0.6955	0.0782	0.2263
	IV	0.7438	0.0878	0.1684
	V	-	0.0488	-
Total	I	0.8202	0.0225	0.1573
	II	0.8361	0.0792	0.0847
	III	0.8023	0.1192	0.0785
	IV	0.7472	0.0971	0.1557
	V	-	0.0766	-
Rural	I	0.7710	0.0337	0.1953
	II	0.7538	0.1001	0.1461
	III	0.7813	0.1092	0.1095
	IV	0.8305	0.0861	0.0834
	V	-	0.0867	-
Urban	I	[illegible]	0.0117	0.1595
	II	[illegible]	[illegible]	0.0935
	III	[illegible]	0.1241	0.0688
	IV	.7210	0.1004	0.1786
	V	-	0.0719	-

The dropout rates of different classes also do not follow any trend but it is found to be maximum in class I amongst pupils of all categories, rural and urban except in the case of 'All' boys, where it is maximum in class II. The dropout rate in class I very from as high as 57.57%, in case of 'All' girls to 15.95% in the case of SC urban. Although promotees rates of boys and girls do not differ appericiably in any category and also between rural and urban areas, Table 4.3 indicates that there is a substainal difference between boys and girls promotees both in case of 'All' and SC, more boys are promoted then girls in all the classes. Comparing rural and urban areas we find that more urban boys being promoted in comparison to rural boys in all classes both amongst 'All' and SC. It also reveals that the difference is higher between boys and girls in case of 'All' than amongst SC children. It is interesting to note that in all classes the girls promotees are more amongst SC as compared to 'All'. Also SC pupils have performed better than 'All' both in rural and urban areas.

TABLE 4.3

PROMOTEES PROFILE

STATE: JAMMU & KASHMIR

Category	Sex/Area	Classes				
		I	II	III	IV	V
All	Boys	1000	825	661	622	589
	Girls	1000	403	243	216	180
	Total	1000	618	448	418	330
	Rural	1000	585	412	372	322
	Urban	1000	768	691	654	524
SC	Boys	1000	657	556	539	524
	Girls	1000	741	646	486	397
	Total	1000	839	761	639	572
	Rural	1000	798	668	584	521
	Urban	1000	839	755	695	557

From these rates flow charts have been prepared to show class to class cohort history which are given in the appendix. With the help of these flow charts different incicies of wastage and stagnation have been calculated which will be discussed below:-

Input/Output Ratio and Overall Drop-out Rates

These two indicies together give the idea of wastage of resources in education. The ideal situation is where input equals output that is the ratio is unity. Thus more the ratio is away from one, lesser the output for a given input. In other words internal efficiency of the

system goes down as the ratio goes farther from one.

Input/Output Ratios and Overall Drop-out Rates

Sex/Area	Input/Output ratio			Overall dropout rate(%)		
	All	SC	ST	All	SC	ST
Boys	1.38	1.49	-	41.1	47.6	-
Girls	2.40	1.76	-	82.0	60.3	-
Total	1.63	1.46	-	62.0	52.8	-
Rural	1.83	1.45	-	67.8	46.9	-
Urban	1.32	1.49	-	47.6	44.3	-

The above table shows that the internal efficiency is quite low particularly in the case of girls. This is primarily due to students dropping out before completing the primary stage and repeating in the same class.

The overall dropout rates amongst 'All' girls is maximum and is of the extent of 82% while in case of SC are girls it is 60.3%. The overall dropout rates in rural areas are more in comparison to urban areas both amongst 'All' and SC.

Percentage Output by Number of Repeating Years

This indicator give us the percentage of students who have completed the cycle in the first attempt that is

passing without repeating in any class or those who have completed after repeating one or more than one class.

Percentage Output by Number of Repeating Years

Category	Years repeated	Percentage output				
		Boys	Girls	Total	Rural	Urban
1	2	3	4	5	6	7
All	0	62.48	71.11	63.95	58.39	71.37
	1	28.86	23.33	27.37	30.43	23.09
	2	8.32	4.44	7.11	9.01	4.58
	3	2.04	1.11	1.58	2.17	0.95
SC	0	67.37	71.03	66.26	64.76	67.50
	1	25.38	23.43	26.40	26.93	25.31
	2	6.12	4.79	6.12	6.78	5.92
	3	1.15	0.76	1.22	1.51	1.26

The above table shown that a majority of pupil (58% to 72%) complete the cycle in the first attempt. The percentage of children passing in the first attempt is more in urban areas than in rural areas, which is true for 'All' as well as 'SC' . From this it can be concluded that the percentage of pupils who stagnate is very low.

Percentage of Pupil-Year spent in Excess

The following table gives the number of pupil-years spent in excess than normally required these have been calculated on the assumption that the output of the system has not required repetition.

Category	Item		Girls	T:	Rural	Urban
	Optimum pupil years to be invested	2615	900	1900	1610	2620
All	Total invested	4071	2164	3092	2940	3488
	Pupil-years spent in excess	1126	1264	1192	1330	868
	% of pupil-years spent in excess	27.66	58.41	38.55	45.24	24.9
SC	Optimum pupil years to be invested	2620	1985	2060	2655	2785
	Total pupil years invested	3912	3490	4186	3891	4117
	Pupil years spent in excess	1292	1505	1326	1236	1332
	% of pupil-years spent in excess	33.03	43.12	31.68	31.76	32.7

This table reveals that the excess number of pupil-years taken is more in case of SC as compared to 'All' both amongst boys and girls, more pupil-years [illegible] in case of 'All' rural as compared to 'All' urban. In case of SC children, the case is reversed where more pupil-years have been spent in excess in case of urban children.

Attribution of Pupil-Years spent in Excess

The pupil years spent in excess can either be due to (i) Repeaters who have completed the cycle after repetition or (ii) due to dropouts. In this table the years attributed to these two categories have been discussed.

Attribution of Pupil-Years spent in Excess

Category	Item	Boys	Girls	Total	Rural	Urban
All	Pupil-years spent in excess	1126	1264	1192	1330	862
	Attributable to i) repeaters who have completed the cycle.	304 (27.00)	64 (5.06)	176 (14.77)	177 (13.31)	127 (14.73)
	ii) Drop-outs	822 (73.00)	1200 (94.94)	1016 (85.23)	1153 (86.69)	735 (85.27)
SC	Pupil-years spent in excess	1292	1505	1326	1236	1359
	i) Attributable to repeaters who have completed the cycle	215 (16.64)	140 (9.30)	242 (18.25)	239 (19.34)	228 (16.78)
	ii) Drop-outs	1077 (83.36)	1365 (90.70)	1084 (81.75)	997 (80.66)	1131 (83.22)

From the table we infer that more excess years have been spent towards girl dropouts both in case of 'All' and SC. We also find that more excess years have been spent in case of rural drop-outs as compared to rural drop-outs as compared to urban drop-outs.

Excess Pupil-Years Attributable to Dropouts but Effective

Dropouts could be either those who have left school in class I or those who have dropped out after passing at least class I. This table gives the bifurcation of those

two categories of dropouts.

Excess Pupil - Years attributable to Dropouts and Effective

Category	Boys	Girls	Total	Rural	Urban
All	341 (41.48)	322 (26.3')	344 (33.86)	403 (34.95)	180 (26.32)
SC	541 (50.23)	682 (49.96)	577 (53.23)	457 (45.84)	118 (51.64)

From this table we find that about 34% excess pupil-years attributable to dropouts were effective in case of 'All' in comparison to SC children where 53% excess pupil-years were effective. We also note that in case of 'All' about 35% excess pupil-years were effective in rural areas and 26% in urban areas. The corresponding figures for SC children were 46% and 55% respectively. It is interesting to note that the percentage of effective years in case of SC are more/in case of boys both as compare to students of all communities.

CONCLUSION: The state has very high dropouts at primary stage particularly in the case of girls where 82% of these girls from all communities dropouts before completing the primary stage. The corresponding figure in the case of Scheduled Castes is 60%. The situation in the case of boys is also not very encouraging where 41% of them amongst all communities and

48% among Scheduled Castes dropout before completing primary stage. Further we find that a majority of pupils dropout in class I itself. Hence, majority of pupils who complete the cycle, complete it without repetition. This also result into low stagnation.

The internal efficiency of the system is quite low particularly in the case of girls. The low internal efficiency and high dropouts result into high amount of wastage.

MADHYA PRADESH

The state of Madhya Pradesh consisting of 45 districts was formed in 1956 as a result of general reorganisation of states in the country. It is the biggest state having an area of 443446 sq. km. As per 1981 Census its population was 52178844 and ranked sixth in the country. The density per sq. km. was 118 and there were 941 females as against 1000 males. About 80% of its population was residing in rural areas. There were 7358533 (14.10%) Scheduled Castes and 11987031 (22.97%) Scheduled Tribes. The Scheduled Tribes are heavily concentrated in the districts of Jhabua, Bastar, Mandla, Shahdol, Surguja and Dhar.

Most of the state is a fertile plateau of an average height of 1600 to 2000 feet above sea level. Nearly one-third of the area of the state is covered with forests. The state is very rich in mineral wealth. It stands next to Bihar and West Bengal in the production of minerals. The main industries are iron and steel, cement, paper, textile, electrical goods, artificial fibre cloth etc. More than 75% of the workers in the state are either cultivators or agricultural labourers. The per capita income of the state in 1981-82 was Rs.1217 as against Rs.1750 for the country and about 60% of the population (24.8 millions) in rural areas was below the poverty line.

The overall literacy rate of the state was 27.07% and it ranked 24th in the country. The literacy rate for male was 39.49% as against 15.53% for females. The literacy rates for Scheduled Caste and Scheduled Tribe population were 18.97% and 10.68% respectively. The literacy rate for rural population was 21.22% as compared to 54.02% for urban population.

As per Fourth All-India Educational Survey, primary education facility within a walking distance of one km. was available to 90.17% of the rural population. The age specific enrolment ratios in the age group 6 to below 11 years were 61.96%, 32.41% and 47.71% for boys, girls and total, respectively. The corresponding ratios in the age group 11 to below 14 years were 37.74%, 18.68% and 33.74%, respectively. This clearly shows that although 90.17% of the rural population had primary education facility within a walking distance of one km. only 47.71% of the children in the age group 6 to below 11 years were enrolled in schools. Thus about 50% of the children either had not gone to school at all or ther dropped out later without completing the primary stage. To estimate the extent of dropouts in the State of Madhya Pradesh 708 schools from rural areas and 287 schools from urban areas were selected for the purpose of this study as discussed below.

Selection of Schools from Rural Areas

The State of Madhya Pradesh was considered as one region for the purpose of selection of schools from rural areas. A sample of 59 district blocks was drawn by adopting probability proportional to size sampling with replacement, size being the number of primary schools'sections in the block. Of these, six blocks were selected twice thus making the total number of sampled blocks to 65. Sixteen of the selected blocks were tribal. From each selected block 12 schools were selected by using simple random sampling procedure.

Selection of Schools from Urban Areas

In urban areas towns were selected using probability proportional to size sampling scheme, size being the population of the town. From each selected town schools were selected by adopting simple random sampling procedure. The number of towns selected from each category along with the number of schools selected from them are given in Table 5.1.

TABLE 5.1

Number of Towns alongwith Number of Schools Selected

Category of towns	Number of towns Selected	Number of schools selected from each category
1	2	3
I	3	72
II	3	48
III	4	32
IV	11	90
V & VI	11	45
Total	32	287

Schools Covered under the Study

After scrutiny of the questionnaires and validation of data, the estimates of promotee, repeater and dropout rates were derived on the basis of 700 schools from rural areas and 275 schools from urban areas.

Promotee, Repeater and Dropout Rates

Classwise promotee, repeater and dropout rates for boys, girls and total and also for rural and urban schools are given in Table 5.2, 5.3 and 5.4 for children belonging to all communitees, SC and ST Categories, respectively.

TABLE

Promotee, Repeat and Dropout Rates
for Pupils of All Communities

SEX/AREA	CLASS	PROMOTEE RATE	REPEATER RATE	DROPOUT RATE
1	2	3	4	5
Boys	I	.6131	.2026	.1843
	II	.7312	.1330	.1358
	III	.6331	.2268	.1401
	IV	.6991	.1738	.1271
	V	-	.1306	-
Girls	I	.6607	.1560	.1833
	II	.6639	.1055	.2306
	III	.6653	.2012	.1335
	IV	.6715	.1639	.1646
	V	-	.1329	-
Total	I	.6270	.1882	.1839
	II	.7095	.1244	.1663
	III	.6436	.2193	.1371
	IV	.6914	.1711	.1375
	V	-	.1312	-
Rural	I	.6027	.2093	.1880
	II	.6722	.1422	.1856
	III	.6221	.2296	.1483
	IV	.6790	.1700	.1510
	V	-	.1259	-
Urban	I	.7396	.0942	.1662
	II	.8529	.0558	.0913
	III	.7078	.1885	.1037
	IV	.7213	.1736	.1051
	V	-	.1423	-

PROMOTEE, REPEATER AND DROPOUT RATES FOR SCHEDULED CASTE PUPILS

SEX/AREA	CLASS	PROMOTEE RATE	REPEATER RATE	DROPOUT RATE
1	2	3	4	5
Boys	I	.6434	.1908	.1658
	II	.7554	.1103	.1343
	III	.6388	.2031	.1581
	IV	.6770	.1700	.1530
	V	-	.1419	-
Girls	I	.6054	.1458	.2488
	II	.7302	.0950	.1748
	III	.5090	.2153	.2757
	IV	.6230	.1979	.1791
	V	-	.2210	-
Total	I	.6340	.1801	.1859
	II	.7496	.1067	.1437
	III	.6090	.2059	.1051
	IV	.6648	.1758	.1594
	V	-	.1503	-
Rural	I	.6087	.2031	.1882
	II	.7405	.1206	.1389
	III	.6026	.2138	.1035
	IV	.6682	.1626	.1692
	V	-	.1436	-
Urban	I	.7531	.0718	.1751
	II	.7850	.0556	.159
	III	.6305	.1815	.1860
	IV	.6571	.2074	.1355
	V	-	.1938	-

AND DROPO
SCHEDULED TRIBE PUPILS

SEX/AREA	CLASS	PROMOTEE RATE	REPEATER RATE	DROPOUT RATE
1	2	3	4	5
	I	.5607	.2160	.2233
	II	.6715	.1693	.1591
Boys	III	.5147	.2570	.2274
	IV	.5526	.2240	.2234
	V	-	.1713	-
	I	.5056	.1975	.2959
	II	.6281	.1257	.2462
Girls	III	.4969	.2132	.2899
	IV	.6189	.1982	.1829
	V	-	.1792	-
	I	.5465	.2112	.2423
	II	.6604	.1611	.1765
Total	III	.5121	.2494	.2385
	IV	.5712	.2198	.2161
	V		.1727	-
	I	.5455	.2207	.2427
	II	.6504	.1686	.1810
Rural	III	.5307	.2511	.2482
	IV	.5491	.2201	.2315
	V	-	.1621	-
	I	.6604	.0722	.2384
	II	.7975	.0718	.1307
Urban	III	.6167	.2338	.1495
	IV	.6757	.2148	.1095
	V	-	.2310	-

Table 5.[illegible] pertaining to all communities reveals that promotee rate [illegible] is higher [illegible] rate is lower in urban schools as compared to rural ones. By and large, classwise repeater rate is higher for boys in comparison to girls.

It is observed from Table 5.3 that the promotee rate in each class is higher for SC boys as compared to SC girls. A reverse trend observed in the case of classwise dropout rate. Table 5.4 relating to ST children indicates that classwise promotee rate is higher in urban schools as compared to rural schools. Also the dropout rate in each class is less in urban schools in comparison to rural schools.

Further, on comparing Tables 5.3 and 5.4 it is observed that classwise [illegible] rates for boys and girls of all communities [illegible] compared to ST boys and ST girls.

From the promotee, repeater and dropout rates, given in Table 5.2, flow charts have been drawn, which are given in Appendices.

Analysis of Efficiency

Table 5.5 gives two indicators of educational wastage namely input/output ratio and overall dropout rate for different categories of children. Here input/output ratio helps to assess the internal efficiency of educational system while overall dropout rate gives the idea of the number of children who discontinue their studies without completing

the cycle.

TABLE 5.5

INPUT/OUTPUT RATIOS AND OVERALL DROPOUT RATE

SEX/AREA	INPUT/OUTPUT RATIO			OVERALL DROPOUT RATE (%)		
	ALL	SC	ST	ALL	SC	ST
1	2	3	4	5	6	7
Boys	1.87	1.90	2.72	56.1	56.8	72.7
Girls	1.98	2.46	2.92	61.7	71.7	78.5
Total	1.90	2.00	2.75	57.9	60.6	74.1
Rural	2.05	2.05	2.93	61.8	61.6	75.9
Urban	1.54	1.84	1.79	43.3	57.4	56.3

Table 5.5 [illegible] in each [illegible] output ratio as well as overall dropout rate is higher in rural schools as compared to urban schools. Further, in each category these indicators are lower for boys in comparison to girls. The input/output ratio and overall dropout rate is the highest amongst ST girls. It is alarming to note that in rural schools about three-fifths of the children of SC and all communities and three-fourth of the ST children discontinue their studies without completing the cycle.

Percentage Cutput by Number of Repeting Years

Table 5.6 gives the percentage output [illegible] from the flow charts given in the appendices.

TABLE 5.6

Percentage Cutput by Number of Repeating Years

Category	Years repeated	Percentage Output				
		Boys	Girls	Total	Rural	Urban
1	2	3	4	5	6	7
All	0	39.45	44.39	40.85	39.01	49.55
	1	34.10	33.68	33.97	34.29	32.19
	2	17.66	15.40	17.34	18.06	13.11
	3	8.49	6.53	7.84	8.64	5.35
SC	0	41.67	38.52	40.86	40.36	45.48
	1	34.26	33.92	34.26	34.12	32.86
	2	16.66	17.67	17.03	17.45	14.32
	3	7.41	9.89	7.87	8.07	7.34
ST	0	32.60	37.21	33.59	33.61	31.23
	1	33.70	34.42	33.98	33.91	34.21
	2	21.25	18.60	20.16	20.77	17.93
	3	12.45	9.77	11.97	12.03	9.38

It is evident from Table 5.6 that out of the pupils who completed the cycle, about two-fifth belonging to SC and [illegible] communities [illegible] one-third in the ST category complete [illegible] without repeating any class. In each category about one

third of the children complete the cycle with one year repetition. The percentage of children who complete the cycle without repetition is higher in urban schools in comparison to rural schools and this percentage is [illegible] lowest in the case of ST pupils.

Promottes Profile

Table 5.7 gives the promotees profile for different categories of children. This profile can be used for computing class to class transition rates.

TABLE 5.7

Promotees Profile

Category	Sex/Area	Classes				
		I	II	III	IV	V
1	2	3	4	5	6	
	Boys	1000	767	[illegible]	[illegible]	[illegible]
	Girls	[illegible]		[illegible]		
All	Total	1000	[illegible]	624	[illegible]	[illegible]
	Rural	1000	761	[illegible]	[illegible]	[illegible]
	Urban	1000	817	738	[illegible]	
	Boys	1000	793	673	[illegible]	
	Girls	1000	709	572	[illegible]	[illegible]
S C	Total	1000	[illegible]	[illegible]	[illegible]	[illegible]
	Rural	1000	763	[illegible]	[illegible]	[illegible]
	Urban	1000	[illegible]	675	518	426
	Boys	1000	714	573	392	[illegible]
	Girls	1000	629	452	282	215
ST	Total	1000	692	544	366	[illegible]
	Rural	1000	685	534	352	241
	Urban	1000	744	640	513	437

It may be noticed from Table 5.7 that in each category the number of children who completed the cycle is more in urban schools in comparison to rural schools. Further this number is lesser in the case of girls as compared to boys.

Pupil-Years spent in Excess

Table 5.8 gives the pupil-years spent in excess and its percentage to total pupil-years invested for different categories of children.

Table 5.8

Pupil-Years Spent in Excess

Category	Item	Boys	Girls	Total	Rural	Urban
1	2	3	4	5	6	7
All	Optimum pupil-years to be invested	2100	1915	2105	1910	2785
	Total pupil-years invested	4082	3791	3994	3906	4211
	Pupil-Years spent in excess	1982	1876	1887	1996	1426
	%of pupil-years spent in excess to total pupil-years invested	48.59	49.49	[illegible]	[illegible]	[illegible]
SC	Optimum pupil-years to be invested	2160	1415	1970	1920	2130
	Total pupil-years invested	4100	3487	3946	3915	[illegible]
	Pupil-years spent in excess	1940	2072	1976	2065	[illegible]
	%of pupil-years spent in excess to total pupil years invested	47.32	59.42	50.08	71.13	[illegible]
ST	Optimum pupil-years to be invested	2365	1075	1295	1205	2485
	Total pupil-years invested	3705	3136	3566	3517	3943
	Pupil-years spent in excess	2341	2061	2271	2320	1728
	%of pupil-years spent in excess to total pupil-years	63.17	65.72	63.68	65.93	44.16

It is revelaled from Table 5.8 that the percentage of pupil-years spent in excess is higher in the case of girls as compared to boys. Further this percentage is higher in rural schools in comparison to urban schools. The [illegible] percentage is the highest among the SI children and the lowest for [illegible] children belonging to all communities.

Attribution of Pupil-Years spent in Excess

The pupil-years spent in excess may be attributed a) those repeaters who completed the cycle through repetition and b) to pupils who [illegible] out in between.

[illegible] 5.9

[illegible] Pupil-Years spent in Excess

[illegible]		Girls	Total	Rural	[illegible]
[illegible]		1876	1037	[illegible]	[illegible]
[illegible]	[illegible]	122 (17.16)	[illegible]	[illegible]	[illegible] (27.0[illegible])
[illegible]	[illegible]	[illegible]	[illegible]	[illegible]	1101 ([illegible])
[illegible]	[illegible]	[illegible]	[illegible]	[illegible]	[illegible]
[illegible]	[illegible]	[illegible] (1[illegible].51)	[illegible]	[illegible]	[illegible] (19.09)
[illegible]	[illegible]	[illegible]	[illegible]	[illegible]	1454 (80.91)
[illegible]	[illegible]	[illegible]	[illegible]	[illegible]	1723
[illegible]	[illegible]	217 (10.53)	[illegible] (12.64)	[illegible] (11.54)	[illegible]
[illegible]	[illegible]	[illegible] (89.47)	[illegible]	[illegible]	[illegible]

Figures in parentheses indicate percentage.

It may be noticed from Table 5.9 that in each category more than 75% of the pupil-years spent in primary stage attributable to dropouts. Further this percentage is higher in rural schools in comparison to urban schools. The above percentage is the highest amongst ST children and lowest for children belonging to all communities.

Excess Pupil-Years Attributable to Dropouts but Effective

Table 5.10 gives those excess pupil-years attributable to dropouts which have been effectively utilized by them.

TABLE 5.10

Excess pupil-years Attributable to Dropouts but Effective

Category	Boys	Girls	Total	Rural	Urban
1	2	3	4	5	6
All	620 (42.2)	(44.[illegible])	644 (43.96)	683 (41.95)	526 (47.77)
SC	705 (45.43)	801 (44.70)	730 (45.22)	739 (44.33)	726 (49.93)
ST	862 (42.44)	718 (39.94)	825 (41.58)	849 (41.33)	586 (44.70)

NOTE: The figures in the parentheses indicate percentages with respect to excess pupil-years due to dropouts.

It is revealed from Table 5.10 that the percentage of pupil-years effectively utilised by the dropouts is higher in case of urban schools as compared to rural ones. This percentage is lowest amongst ST girls. It will be worthwhile

to note that about two-fifths of the excess pupil-years attri-
b[illegible] dropouts [illegible] collectively [illegible] dropped out children who discontinued their studies beyond class I and thus this portion of the excess pupil-years may not be considered as a total wastage.

Conclusions: The state has very high dropouts at primary stage particularly in the case of ST pupils where 74.1% of them [illegible] out before completing the cycle. Also the input/output ratio is very high particularly in the case of ST children where this ratio is 2.75 which shows that the internal efficiency of the educational system in the state is very low. This is because a large number of children dropout prematurely [illegible] children who complete the cycle, only about 40% of them complete it with no repetition and rest of them complete it with one or more years repetition. Further out of the pupil-years spent in [illegible] about one-fifth of them are ascribed to pupils who complete the cycle through repitition and remaining four-fifths to the dropouts. The indicators of educational wastage such as input/output ratio, overall dropout rate, percentage of pupil-years spent in excess [illegible] higher in rural schools as compared to urban schools. Further these indices are higher for girls in comparison to boys.

[illegible]

The state of Orissa consisting of 13 districts covers an area of 155707 sq. km. and it ranks 10th in the country. As per 1981 Census its population was 26370271 and its ranking was 11th in the country. The density per sq. km. was [illegible]. There were 981 females for every 1000 males. About [illegible] population was residing in rural areas. There were [illegible] (14.6 Scheduled Castes and 5915067 (22.43%) Scheduled Tribes. The state has rich mineral resources and a net work of rivers. Three-fourths of the workers in the state were either cultivators or agricultural labourers.

According to 1981 census the percentage of literate persons in the state was 34.23% and its ranking was 24th in the country. The corresponding figures for males and females were 47.10% and 21.12% respectively. The literacy rate in rural areas was 31.49% [illegible] 54.77% in urban areas. The literacy rates for Scheduled Castes and Scheduled Tribes population were 22.41% and 13.96% respectively.

As per Fourth All India Educational Survey 93.95% of the rural population had primary education facilities within walking distance of one km. The corresponding All India figure was 92.82%. The age specific enrolment ratios for the age group 6 to below 11 years for boys, girls and total were 67.80%, 44.57% and 56.46%, respectively. For the age

group 11 to below 14 years these ratios were 53.91%, 56.91% and 40.67%, respectively [illegible] ly shows [illegible] .95% of the rural population had access to primary education facility within a walking distance of one kn. only 56.46% of the children in the age group 6 to below 11 years were enrolled in schools. This indicates that sizable number of children either had not gone to school at all or they dropped out later without completing the primary stage. The problem is much [illegible] in the case of girls where only 44.57% of the girls in the age group 6 to below 11 years were enrolled in schools. To estimate the extent of dropouts in the [illegible] Orissa 700 schools from rural areas and 193 school urban areas were selected for the purpose of the [illegible] [illegible] below:-

Selection of Schools from [illegible] ral Areas

For the purpose of selection of schools from [illegible] areas the state [illegible] into three zones. The Northern zone consisted of five districts namely Keonjhar, S[illegible] Sundargarh, Balangir and Dhenkanal. The Central zone consisted of four districts namely Mayurbhanja, Balasore, Cuttack and Puri, while Southern zone consisted of four districts namely Ganjam, Koraput, Phulbani and Kalahandi. Each zone was further divided into Tribal and Non-[illegible] areas. The number of blocks to be selected from each [illegible]

decided on the basis of proportional allocation, is given in Table 6.1

TABLE 6.1

Number of Blocks to be selected

Zone	Number of blocks to be selected		
	Tribal area	Non-Tribal area	Total
1	2	3	4
Northern Zone	8	17	25
Central Zone	7	22	29
South rn Zone	15	11	26
Total	30	50	80

The selection of blocks in each of the above six areas was done by using probability proportional to size with replacement sampling, where size being the number of primary schools/sections in the block. Since the sampling scheme with replacement was adopted, ten blocks were selected twice and thus only 70 district blocks were selected instead of 80. Ten schools were selected from each of the selected block by using simple random sampling.

Selection of Schools from Urban Areas

In all 16 towns were selected from the state of Tripura by following the probability proportional to size

sampling scheme, size being the population of the town. Simple random sampling was used in the selection of schools from the selected towns. Number of selected towns alongwith schools selected from each category are given in Table 6.2

TABLE 6.2

Number of selected Towns alongwith Number of Schools selected

Category of Town	Number of towns selected	Number of schools selected
1	2	3
I	3	72
II	3	48
III	3	24
IV	4	42
V & VI	3	12

Schools Covered under the study

After scrutiny of the questionnaires and validation of data further analysis was carried out on the basis of schools given in Table 6.2.

TABLE 6.3

Schools Covered under the study

Region/ category of town	Schools covered			
	Rural			Urban
	Tribal	Non-Tribal	Total	
1	2	3	4	5
Northern zone	73	131	204	-
Central zone	60	191	251	-
Southern zone	120	97	217	-
Class I towns	-	-	-	69
Class II towns	-	-	-	49
Class III towns	-	-	-	24
Class IV towns	-	-	-	38
Class V & VI towns	-	-	-	8
Total		419		187

Promotion, Repeater and Dropout Rates

By following the procedure explained in Chapter 2, classwise promotee, repeater and dropout rates have been worked out. These rates for boys, girls and total and also for rural and urban schools are given in Tables 6.4, 6.5 and 6.6, respectively for the children belonging to all communities, SC and ST categories.

TABLE 6.4

Promotee, Repeater and Dropout Rates
for [illegible] Communities

Sex/Area	Class	Promotee rate	Repeater rate	Dropout rate
1	2	3	4	5
Boys	I	.8003	.0576	.1421
	II	.8[illegible]12	.0547	.1011
	III	.8[illegible]81	.1[illegible]05	.0414
	IV	.8[illegible]36	.[illegible]	.[illegible]637
	V	-	.0201	-
Girls	I	.8426	.0615	.0959
	II	.8497	.0438	.[illegible]5
	III	.7051	.1061	.1088
	IV	.8127	.0739	.[illegible]
	V	-	.0226	-
Total	I	.8159	.0590	.[illegible]
	II	.8445	.0509	.[illegible]
	III	[illegible]	.1212	.[illegible]
	IV	.8463	.0733	.0804
	V	-	.[illegible]	-
Rural	I	.5338	.3267	.1395
	II	.7053	.1859	.1088
	III	.5530	.2370	.2000
	IV	.6349	.1773	.1978
	V	-	.1000	-
Urban	I	.8735	.0039	.1226
	II	.8686	.0278	.1036
	III	.8508	.1028	.0464
	IV	.8730	.0599	.0671
	V	-	.0139	-

TABLE 6.5

Promotee, Repeater and Dropout Rates
for Scheduled Caste Pupils

Sex/Area	Class	Promotee rate	Repeater rate	Dropout rate
1	2	3	4	5
Boys	I	.7886	.0474	.1640
	II	.9067	.0570	.0363
	III	.7052	.1574	.1374
	IV	.8221	.0406	.1373
	V	-	.0427	-
Girls	I	.7183	.0495	.2322
	II	.7968	.0585	.1447
	III	.6400	.1820	.1780
	IV	.7601	.1243	.1156
	V	-	.0529	-
Total	I	.7642	.0482	.1876
	II	.741	.0580	.0679
	III	.6825	.1646	.1529
	IV		.1243	.1368
	V	-	.0458	-
Rural	I	.6817	.2920	.1163
	II	.7045	.1974	.0981
	III	.4593	.2444	.2961
	IV	.5640	.1860	.1499
	V	-	.1135	-
Urban	I	.7996	.0018	.1986
	II	.9094	.0260	.0646
	III	.7181	.1519	.1300
	IV	.8838	.0436	.0726
	V	-	.0373	-

T[illegible] 5.6,

Promotee. [illegible] and Dropout [illegible]
Sched[illegible] Tribe Pupils

Sex/Area	Class	Promotee rate	Repeater rate	Dropout rate
1	2	3	4	5
	I	.5768	.1452	.2780
	II	.7[illegible]81	.0678	.1541
Boys	III	.7951	.1571	.0478
	IV	.[illegible]	.1799	.0946
	V	–	.0243	–
	I	.6543	.177	.1683
	II	.6[illegible]19	.0595	.278[illegible]
Girls	III	.6536	.1458	.[illegible]
	IV	.4[illegible]	.0801	.[illegible]
	V	–	.0412	–
	I	.6032	.1538	.[illegible]
	II	.7373	.0650	[illegible]
[illegible]	III	.7482	.1570	.[illegible]
	IV	[illegible]	.1543	[illegible]
	V	–	[illegible]	–
	I	[illegible]	.2[illegible]3	.250[illegible]
	II	.6366	.1[illegible]25	.178[illegible]
Rural	III	.5115	.[illegible]575	.231[illegible]
	IV	.677[illegible]	.2204	.102[illegible]
	V	[illegible]	.1135	–
	I	.7377	.022[illegible]	.2395
	II	[illegible]	.0023	.2218
Urban	III	.[illegible]	.0[illegible]	.06[illegible]4
	IV	.[illegible]461	.[illegible]	.2131
	V	–	.0024	–

It may be noted from Table 6.4 pertaining to all communities that promotee rate in each class is considerably higher in urban schools than in rural schools. Also the classwise repeater rate specially in classes I and II and dropout rate in classes III and IV of urban schools is considerably lower in comparison to rural schools.

It is observed from Table 6.5 and 6.6 that classwise repeater rates for SC and ST pupils specially in classes I and II are considerably higher in rural schools as compared to urban schools. Further classwise promotee rate is higher for SC boys in comparison to SC girls.

On comparing Tables 6.4 and 6.6 it may be seen that promotee rates for boys and girls of all communities are higher than those of ST boys and ST girls. Also classwise dropout rates for boys as well as for girls of all communities are lower as compared to ST boys and ST girls.

On the basis of promotee, repeater and dropout rates given in Table 6.4, flow charts have been drawn, which are given in appendices.

Analysis of Efficiency

Table 3.7 ... namely input/output ratios and overall dropout rate for different categories of pupils. Input/output ratio helps to assess the internal efficiency of the educational systems in the state while overall ... gives the idea of number of children who dropped out in between without completing the cycle.

TABLE 3.7

Input/Output Ratio and Overall Dropout Rate

Sex/Area	Input/Output Ratio			Overall Dropout		
	All	SC	ST	All	SC	ST
1	2	3	4	5	6	
Boys	1.28	1.46	1.58	31.9	[illegible]	[illegible]
Girls	1.37	[illegible]	[illegible]	37.7	[illegible]	[illegible]
Total	1.32	1.52	1.76	35.1	47.4	61.4
Rural	2.33	2.48	2.46	63.4	65.7	70.4
Urban	1.24	1.36	1.70	31.7	41.3	59.1

The input/output ratio as well as ... dropout rate is the highest among ST girls where ... three-fourths of them discontinue their studies without

completing the cycle. It may be worthwhile to note that input/output ratio as well as overall dropout rate is higher for girls in comparison to boys. Also these two indicators are considerably higher for rural schools as compared to urban schools.

In rural schools these indicators do not show any appreciable difference between the children of all communities and of SC and ST categories but in urban schools these indicators for ST children are considerably higher in comparison to children belonging to all communities. It is alarming to note that about 90% of the ST children in urban schools and 70% in rural schools discontinue their studies without completing the cycle.

Percentage Output by Number of Repeating Years

From the flow rates given in the appendices percentage output by number of repeating years has been calculated and given in Table 6.8

4.12.0.0

Percentage Output by Number of Repeating Years

Category	Years repeated	Percentage Output				
		Boys	Girls	Total	Rural	Urban
1	2	3	4	5	6	7
All	0	70.39	72.80	71.34	33.06	80.44
	1	23.96	22.32	23.42	33.88	16.81
	2	4.76	4.24	4.62	21.04	2.46
	3	0.89	0.65	0.62	12.02	0.29
SC	0	69.47	60.08	67.30	32.95	75.90
	1	24.21	28.47	25.29	33.82	19.87
	2	5.44	8.57	6.08	21.57	3.5
	3	0.88	2.08	1.33	11.66	0.63
ST	0	54.41	58.45	55.64	32.65	76.[illegible]
	1	31.18	29.22	30.83	34.02	19.[illegible]
	2	11.[illegible]	[illegible]59	10.6[illegible]	[illegible]	[illegible]18
	3	3.23	2.74	3.11	12.03	[illegible]7

The above table indicates that there is marked difference between the percentage of rural and urban pupils who complete the cycle without repitition. More than 75% of the pupils in urban schools complete the cycle without repitition whereas for rural schools this figure does not exceed 33.06%.

Promotees Profile

Table 6.9 gives the promotees profile for different categories of pupils. This profile may be used to find out class to class transition rates of the pupils.

TABLE 6.9

Promotees Profile

Category	Sex/Area	Classes				
		I	II	III	IV	V
1	2	3	4	5	6	7
All	Boys	1000	849	758	721	672
	Girls	1000	897	797	700	614
	Total	1000	867	772	712	649
	Rural	1000	784	673	485	[illegible]
	Urban	1000	877	783	742	690
S C	Boys	1000	[illegible]	796	[illegible]	[illegible]
	Girls	1000	755	639	499	4[illegible]
	Total	1000	803	745	608	52[illegible]
	Rural	1000	830	721	430	[illegible]
	Urban	1000	802	749	633	58[illegible]
ST	Boys	1000	675	563	530	465
	Girls	[illegible]	795	560	428	219
	Total	1000	712	561	497	386
	Rural	1000	657	510	344	291
	Urban	1000	756	588	548	409

It may be noticed from the promotees profile for all communities as well as for SC and ST, that the number of pupils who complete the cycle is more in the case of boys in comparison to girls. Further, in each category the number of children who complete the cycle is more in the case of urban schools as compared to rural schools.

Pupil-Years spent in Excess

The Pupil-years spent in excess and its percentage with respect to total pupil-years invested is given in Table 6.10 for different categories of children.

TABLE 6.10

Pupil-Years Spent in Excess

Category	Item	Boys	Girls	Total	Rural	Urb-
1	2	3	4	5	6	7
All	Optimum pupil-years to be invested	3360	3070	3245	1830	3150
	Total pupil-years invested	4294	4277	4285	4265	4296
	Pupil-years spent in excess	934	1207	1040	2435	1318
	% of pupil-years spent in excess to total pupil-years invested	21.75	28.22	24.27	57.09	19.17
SC	Optimum pupil-years to be invested	2850	2160	2630	1715	2925
	Total pupil-years invested	4159	3658	3990	4261	3977
	Pupil-years spent in excess	1309	1498	1360	2546	1052
	% of pupil-years spent in excess to total pupil-years invested	31.47	40.95	34.09	59.75	26.45
ST	Optimum pupil-years to be invested	2325	1095	1930	1455	2045
	Total pupil-years invested	3676	3407	3587	3576	3467
	Pupil-years spent in excess	1351	2312	1657	2121	1422
	% of pupil-years spent in excess to total pupil-years invested	36.75	67.86	46.19	59.31	41.02

The above table reveals that percentage of pupil-years spent in excess among the girls belonging to all communities as well as to SC and ST, is higher as compared to

corresponding boys. It is also observed that this percentage is considerably higher in rural schools as compared to urban schools. For ST girls this percentage is highest. In rural schools there is no difference between the children of all communities and of SC and ST categories as far as this percentage is concerned but in urban schools this percentage is higher for ST children in comparison to children of SC and all communities.

Attribution of Pupil-Years Spent in Excess

Table 6.11 explains in what proportion the pupil-years spent in excess have been utilized by the children

a) who completed the cycle through repetition and

(b) by those who dropped out in between without completing the cycle.

TABLE 6.11

Attribution of Pupil-Years Spent in Excess

Category	Item	Boys	Girls	Total	Rural	Urban
1	2	3	4	5	6	7
All	Pupil-years spent in excess	934	1207	1040	2435	818
	Excess years attributable to					
	a) Pupils who completed the cycle through repetition	243 (26.02)	201 (16.65)	224 (21.54)	410 (16.84)	156 (19.07)
	b) dropouts	691 (73.98)	1006 (83.35)	816 (78.46)	2025 (83.16)	662 (80.93)
SC	Pupil-years spent in excess	1309	1498	1360	2546	1052
	Excess years attributable to					
	a) Pupils who completed the cycle through repetition	215 (16.42)	224 (14.95)	218 (16.03)	384 (15.08)	170 (16.16)
	b) dropouts	1094 (83.58)	1274 (85.05)	1142 (83.97)	2162 (84.92)	882 (83.84)
ST	Pupil/years spent in excess	1351	2312	1657	2121	1422
	Excess years attributable to					
	a) Pupils who completed the cycle through repetition	294 (21.76)	124 (5.36)	237 (14.30)	328 (15.46)	114 (8.02)
	b) dropouts	1057 (78.24)	2188 (94.64)	1420 (85.70)	1793 (84.54)	1308 (91.98)

Figures in parentheses indicate percentages.

It may be visualized from the above table that about

three-fourths of the excess pupil-years are attributable to dropouts. It may also be seen that percentage of excess pupil-years attributable to dropouts is higher in the case of girls as compared to boys. The percentage of excess pupil-years attributable to those children who completed the cycle through repitition is lowest in the case of S[illegible].

Attribution of Excess Pupil-Years due to Dropouts

The excess pupil-years attributable to dropouts may again be divided into two parts. The first part includes those excess pupil-years, which have been effectively utilized by the dropouts and the second part consists of those pupil years which have not been effectively utilized by the dropouts. Table 6.12 gives the above bifurcation of excess pupil-years attributable to dropouts.

TABLE 6.12

Excess Pupil-Y[illegible] [illegible]able to D[illegible]

Category	Boys	Girls	Total	Rural	[illegible]
1	2	3	4	5	
All	312 (45.1[illegible])	552 (54.67)	404 (49.5[illegible])	844 ([illegible]1.68)	[illegible] (50.[illegible])
SC	573 (52.92)	597 (49.86)	578 (50.61)	[illegible] ([illegible])	[illegible]29 ([illegible]8.64)
ST	373 (35.29)	1126 (51.46)	612 (43.10)	63[illegible] (35.58)	665 (50.84)

Note: Figures in the parentheses indicate percentages with respect to excess pupil-years attributable to dropouts.

It is revealed from Table 6.12 that in each category of children at least 35% of the excess pupil-years attributable to drop-outs are effectively utilized by the pupils who continue their studies beyond class I and this part may not be considered as a total wastage. For each category of children this percentage of effectively utilized excess pupil-years is higher in urban schools as compared to rural schools.

Conclusion:

The state of Orissa has very high dropouts particularly in the case of ST girls where 78.1% of them drop -out before completing the cycle. Also the input/ output ratio is quite high in the case of ST girls, which shows that the internal efficiency of the educational system is very low. The indicators of educational wastage such input/output ratio, overall dropout rate and percentage of pupil-years spent in excess are higher for rural schools as compared to urban schools. Further these indicators are higher for girls in comparison to boys.

RAJASTHAN

The state of Rajasthan covers an area of 342239 sq. km. and it is the second largest state in India after Madhya Pradesh. According to 1981 Census, total population of the state was 34261862 and it ranked 9th in the country. About 80% of the porulation was residing in rural areas. The density of population per sq. km. was 100. There were 919 females for every 1000 males. The overall literacy rate of the state was 24.38% and it ranked 29th in the country. The literacy rate of males was 36.30% as compared to 11.42% for females. The situation was worse in rural areas where the literacy rate was 17.99% as against 48.35% in urban areas. The state consists of 28 educational districts which have been divided into 236 Panchayat Samities like blocks in other states.

The state of Rajasthan is a land of diversity comprising desert areas, hilly tracks, undulating regions, fascinating valleys and productive plains. More than one-third of the state is covered by the Thar Desert.

As per Fourth All India Educational Survey the primary education facility within a walking distance of one km. was available to 88.50% of the rural population. The corresponding All India figure was 92.82%. The age-specific enrolment ratios for the age group 6 to below 11 years for boys, girls and total were 65.86%, 23.01% and 45.22%

respectively. The corresponding ratios for the age group 11 to below 14 years were [illegible], 11.94% and [illegible], respectively. It may be visualized from here that although 88.50% of the rural population was having the primary education facility within a walking distance of one km. only 45.22% of the children in the age group 6 to below 11 years were enrolled in schools. The situation was even more worse in the case of girls, where only 23.01% of them were enrolled in schools. This indicates that a large number of children either had not gone to schools at all or they dropped out later without completing the primary stage.

Selection of Schools from Rural Areas

For the purpose of selection of schools from rural areas, the state was divided into five educational divisions namely Bikaner, Jodhpur, Jaipur, Udaipur and Kota. Udaipur educational division was further divided into tribal and non-tribal areas. The number of Panchayat Samities to be selected from each educational division, decided by proportional allocation,

is give in Table 7.1.

TABLE 7.1

Number of Panchayat Samities to be selected

Educational division	Tribal area	Non-Tribal area	Total
1	2	3	4
Bikaner	-	11	11
Jodhpur	-	16	16
Jaipur	-	15	15
Udaipur	6	10	16
Kota	-	12	12
TOTAL	[illegible]	[illegible]	70

Since probability proportional to size with replacement sampling scheme was adopted in the selection of Panchayat Samities, six panchayat samities were selected twice and one Panchayat Samiti thrice. Thus in all 62 distinct Panchayat Samities were selected instead of 70. Further 10 schools were selected from each selected Panchayat Samiti by using the simple random sampling procedure.

Selection of Schools from Urban Areas

In all 24 towns were selected by adopting probability proportional to size sampling, size being the population of the town. In this state 20% of the schools were selected from each selected town of class I category instead of 24 schools, 40% schools from each selected class II town instead of 16 schools and 50% schools from each selected class III town instead of 8 schools. All schools were selected from the selected class IV, class V and VI towns. The above change was made to get the required number of schools from the urban areas. Schools in the selected towns were selected by adopting simple random sampling. Category wise number of selected towns along with number of schools selected has been given in Table 7.2.

TABLE 7.2

Number of Selected Towns alongwith Number of Schools Selected

Category of town	Number of selected towns	Number of schools selected
1	2	3
I	3	138
II	3	30
III	5	45
IV	10	84
V & VI	3	7
Total	24	304

Schools Covered under the study

The analysis of ... was done in respect of 300 schools located in rural areas and 235 schools in urban areas. The questionnaires from the remaining schools were either not received or rejected at the time of scrutiny due to incomplete/ inconsistent information given in them.

Promotees, Repeater and Dropout Rates

Due to ungraded system of education in classes I and II in the state of Rajasthan, it could not be possible to work out the promotee, repeater and dropout rates for class I and Class II. Table 7.3, 7.4 and 7.5 give these rates starting from class III for the children belonging to all communities, SC and ST categories, respectively.

Table 7.3 pertaining to pupils of all communities reveals that in each class promotee rate is higher and dropout rate is lower in urban schools in comparison to rural schools. Tables 7.4 and 7.5 indicate that in each class promotee rate is higher and dropout rate is lower for SC and ST boys as compared to SC and ST girls. On comparing Tables 7.3, 7.4 and 7.5 it is observed that in each class dropout rate is lower for both boys and girls of all communities in comparison to SC and ST boys and girls.

On the basis of promotee, repeater and dropout rates given in Table 7.3, flow charts have been drawn on the assumption that 1000 pupils enter class III instead of Class I.

Analysis of Efficiency

Some selected indicators already discussed in chapter 2 have been used to summarise the main features of :

TABLE 7.3

Promotee, Repeater and Dropout Rates for Pupils of All Communities

Sex/Area 1	Class 2	Promotee rate 3	Repeater rate 4	Dropout rate 5
Boys	III	.8385	.0246	.1369
	IV	.8092	.0663	.1245
	V	-	.0429	-
Girls	III	.8380	.0186	.1434
	IV	.8168	.0667	.1165
	V	-	.0335	-
Total	III	.8384	.0229	.1387
	IV	.8114	.0664	.1222
	V	-	.0402	-
Rural	III	.8145	.0311	.1544
	IV	.7811	.0601	.1588
	V	-	.0344	-
Urban	III	.8582	.0157	.1261
	IV	.8267	.0707	.1026
	V	-	.0440	-

TABLE 7.4

Promotee, Repeater and Dropout Rates for Scheduled Caste Pupils

Sex/Area	Class	Promotee rate	Repeater rate	Dropout rate
1	2	3	4	5
Boys	III	.7631	.0390	.1979
	IV	.7334	.0919	.1747
	V	-	.0510	-
Girls	III	.6205	.0442	.3353
	IV	.6883	.0576	.2541
	V	-	.0599	-
Total	III	.7361	.0394	.2245
	IV	.7254	.0859	.1887
	V	-	.0530	-
Rural	III	.7183	.0342	.2475
	IV	.7348	.0955	.1697
	V	-	.0697	-
Urban	III	.7563	.0452	.1985
	IV	.7170	.0761	.2069
	V	-	.0524	-

TABLE 7.5

Promotee Repeater and Dropout Rate for Scheduled Tribes Pupils

Sex/Area	Class	Promotee Rate	Repeater Rate	Dropout Rate
1	2	3	4	5
Boys	III	.7845	.0136	.2019
	IV	.7343	.0661	.1996
	V	-	.0598	-
Girls	III	.6865	.0545	.2590
	IV	.6669	.0830	.2501
	V	-	.0753	-
Total	III	.7708	.0195	.2097
	IV	.7246	.0685	.2069
	V	-	.0632	-
Rural	III	.7672	.0075	.2253
	IV	.7232	.0662	.2106
	V	-	.0443	-
Urban	III	.7811	.0501	.1688
	IV	.7280	.0717	.2003
	V	-	.0993	-

internal efficiency at the Primary stage of education. Table 7.6 gives the input/output ratios and overall dropout rates for different categories of children.

TABLE 7.6

Input/Output Ratios and Overall Dropout Rates

Sex/Area	Input/Output ratio			Overall dropout rate(%)		
	All	SC	ST	All	SC	ST
1	2	3	4	5	6	7
Boys	1.22	1.35	1.35	25.5	35.9	37.5
Girls	1.21	1.57	1.53	25.3	52.6	47.2
Total	1.22	1.38	1.37	25.4	39.2	
Rural	1.26	1.38	1.37	30.1	39.6	38.8
Urban	1.19	1.38	1.37	22.5	38.5	40.1
						35.5

Table 7.6 reveals that input/output ratio as well as overall dropout rate is highest among SC girls. The input/output ratio as well as overall dropout rate is higher in SC and ST girls in comparison to SC and ST boys. Further the overall dropout rate is higher in rural schools as compared to urban schools.

Percentage output by Number of Repeating Years

Table 7.7 gives the percentage output by number of repeating years.

TABLE 7.7

Percentage Output by Number of Repeating Years

Category	Years repeated	Percentage output				
		Boys	Girls	Total	Rural	Urban
1	2	3	4	5	6	7
All	0	87.11	88.49	87.53	87.98	87.49
	1	11.68	10.57	11.26	11.02	11.48
	2	1.21	0.94	1.21	1.00	1.03
	3	0.00	0.00	0.00	0.00	0.00
SC	0	82.84	84.60	83.22	81.29	83.58
	1	15.13	13.71	14.80	16.23	14.47
	2	1.72	1.69	1.65	2.15	1.63
	3	0.31	0.00	0.33	0.33	0.32
ST	0	86.72	80.11	85.62	88.48	79.53
	1	12.00	17.05	12.91	10.52	17.52
	2	1.28	2.46	1.31	1.00	2.48
	3	0.00	0.38	0.16	0.00	0.47

It is observed from Table 7.7 that out of the pupils completing the cycle about 87.5% of them complete class III as well as class IV without repetition. For SC and ST pupils this percentage is 83.22 and 85.62 respectively.

Promotees Profile

Table 7.8 gives promotees profile for different categories of pupils. Class to class movement of the pupils can be seen from this profile.

TABLE 7.8

Promotees Profile

Category	Sex/Area	Classes		
		III	IV	V
1	2	3	4	5
	Boys	1000	860	745
	Girls	1000	851	747
All	Total	1000	859	746
	Rural	1000	841	699
	Urban	1000	872	775
	Boys	1000	794	641
	Girls	1000	649	474
SC	Total	1000	766	608
	Rural	1000	744	604
	Urban	1000	790	615
	Boys	1000	795	625
	Girls	1000	726	528
ST	Total	1000	786	612
	Rural	1000	773	599
	Urban	1000	822	645

It is noted from Table 7.8 that number of children who complete the cycle is more in the case of urban schools as compared to rural schools.

Pupil-Years Spent in Excess

Table 7.9 gives pupil-years spent in excess and its percentage with respect to total pupil-years invested.

TABLE 7.9

Pupil-years spent in Excess

Category 1	Item 2	Boys 3	Girls 4	Total 5	Rural 6	Urban 7
All	Optimum pupil-years to be invested	2235	2241	2238	2097	2325
	Total pupil-years invested	2725	2707	2720	2650	2764
	Pupil-years spent in excess	490	466	482	553	439
	%of pupil-years spent in excess to total pupil years invested	17.98	17.21	17.72	20.87	15.88
SC	Optimum pupil-years to be invested	1933	1422	1824	1812	1845
	Total Pupil-years to be invested	2590	2239		[illegible]	2554
	Pupil-years spent in excess	657	817	696	694	709
	%of pupil-years spent in excess to total pupil years invested	25.75	36.49	27.62	27.69	27.76
ST	Optimum pupil-years to be invested	1375	1584	1836	1797	1935
	Total pupil-years invested	2529	2420	2516	2463	2654
	Pupil-years spent in excess	654	836	680	666	719
	% of pupil-years spent in excess to total pupil-years invested	25.86	34.55	27.03	27.04	27.08

Table 7.9 reveals that percentage of pupil-years spent

in excess is higher in the case of SC and ST girls as compared to SC and ST boys. Further this percentage is higher for SC and ST children in comparison to children belonging to all communities.

Attribution of Pupil-years spent in Excess

Table 7.10 explains that in what proportion the pupil-years spent in excess have been used by the children a) who completed the cycle through repetition and b) by those who dropped out in between without completing the cycle. It is observed that about four-fifths of the pupil-years spent in excess are attributable to dropouts.

TABLE 7.10

Attribution of Pupil-Years Spent in Excess

Category	Item	Boys	Girls	Total	Rural	Urban
1	2	3	4	5	6	7
All	Pupil-years spent in excess	490	466	482	553	439
	Excess years attributable to:					
	a) pupils who completed the cycle through repetition	105 (21.43)	93 (19.96)	102 (21.16)	91 (16.46)	105 (23.92)
	b) dropouts	385 (78.57)	373 (80.04)	380 (78.84)	462 (83.54)	334 (76.08)
SC	Pupil-years spent in excess	667	817	696	694	709
	Excess years attributable to:					
	a) pupils who completed the cycle through repetition	125 (18.74)	81 (9.91)	116 (16.67)	130 (18.73)	115 (16.22)
	b) dropouts	542 (81.26)	736 (90.09)	580 (83.33)	564 (81.27)	594 (83.78)
ST	Pupil-years spent in excess	654	836	680	666	719
	a) pupils who completed the cycle through repetition	91 (13.91)	122 (14.59)	98 (14.41)	75 (11.26)	154 (21.42)
	b) dropouts	563 (86.09)	714 (85.41)	582 (85.59)	591 (88.74)	565 (78.58)

Note: Figures in parentheses indicate percentages.

UTTAR PRADESH

Uttar Pradesh is the fourth biggest state in the country with an area of 294411 sq. km. It consists of 57 districts. It is the most populous state with a total population of 110862013 as per 1981 Census. Slightly more than 82% of its population were residing in rural areas. The density of population per sq. km. was 377. There were 885 females for every 1000 males. While 21.16% of its population belonged to Scheduled Castes, the proportion of Scheduled Tribes was 0.21% only.

Literacy rate in the state was 27.16% as against All-India literacy rate of 36.23%. There were 38.76% literates among males and 14.04% among females. The percentage of literates in rural areas was 23.06 as against 45.88 in urban areas.

There were 68122 primary, 12049 upper primary, 2182 secondary and 2687 senior secondary schools in the state as per Fourth All-India Educational Survey. The number of schools with primary sections was 70105, of which 62328 (88.91%) were located in rural areas.

According to the Fourth Survey 85.84% of the rural population was served by primary stage schooling facility within a walking distance of 1 km. including 52.97% having access to the facility within the habitation. This survey also reveals that 53.40% of the children in the age-group 6 to below 11 years were in schools, percentages for boys and girls being

72.54 and 32.74 respectively.

Selection of Schools in Rural Areas

The state was divided into nine regions for selecting blocks (PSU) at first instance. Allocation of blocks to be selected from each region was made in proportion to number of blocks in each of them. From each region the requisite number of blocks were selected by employing PPSWR sampling scheme, size being the number of schools with primary sections in the blocks. In all 110 blocks were selected. Eight schools with primary sections (SSU) were selected from each sampled blocks by adopting SRSWOR sampling procedure. Thus 880 schools were selected from rural areas of Uttar Pradesh.

Selection of Schools in Urban Areas

Two-stage sampling procedure, as discussed in Chapter 2, has been adopted here for selection of schools from urban areas. At the first stage of selection 3 towns from category I, 4 from category II, 8 from category III, 19 from categoryIV, and 31 towns from categories V and VI were selected by adopting PPSWRsampling scheme, size being the population of each town.

At the second stage of selection 24 schools with primary sections from each selected category I town, 16 schools from each selected category II town, and 8 schools from each selected category III town were selected using SRSWOR sampling procedure. All the schools with primary sections of the

remaining selected towns were included in the sample.

Schools covered under the study

The data was analysed in respect of 606 schools in rural areas and 231 schools in urban areas. Since most of the schools covered under the study have reported enrolment of Scheduled Tribes as 'nil', the analysis of data could not be taken up for ST pupils separately.

Promotee, Repeater and Dropout Rates

Tables 8.1 and 8.2 give promotee, repeater and dropout rates for rural and urban areas and for boys and girls of 'All' and SC categories. The tables reveal that classwise promotee rates for boys of SC and all communities are higher than those for girls but by and large the reverse trend is observed in regard to repeater and dropout rates.

TABLE 8.1

Promotee, Repeater and Dropout Rates for Pupils of all communi-

Sex/Area	Class	Promotee rate	Repeater rate	Dropout rate
1	2	3	4	5
Boys	I	.7735	.1714	.0551
	II	.7813	.1482	.0705
	III	.7037	.1533	.1430
	IV	.7460	.1167	.1373
	V	-	.0283	-
Girls	I	.7669	.1851	.0480
	II	.7375	.1389	.1236
	III	.6504	.1618	.1878
	IV	.6802	.1202	.1996
	V	-	.0347	-
Total	I	.7716	.1852	.0432
	II	.7616	.1454	.0930
	III	.6844	.1556	.1600
	IV	.7292	.1177	.1531
	V	-	.0299	-
Rural	I	.6024	.1829	.2147
	II	.7216	.1517	.1267
	III	.6739	.1452	.1809
	IV	.6736	.1205	.2059
	V	-	.0325	-
Urban	I	.7983	.1854	.0163
	II	.7667	.1445	.0888
	III	.6867	.1573	.1560
	IV	.7391	.1171	.1438
	V	-	.0292	-

TABLE 8.2

Promotee, Repeater and Dropout Rates for Scheduled Caste Pupils

Sex/Area	Class	Promotee rate	Repeater rate	Dropout rate
1	2	3	4	5
Boys	I	.8717	.0971	.0312
	II	.7991	.1322	.0687
	III	.6585	.1523	.1892
	IV	.7743	.1080	.1177
	V	-	.0381	-
Girls	I	.7823	.1546	.0631
	II	.7082	.1482	.1456
	III	.6396	.1798	.1806
	IV	.6871	.1127	.2002
	V	-	.0484	-
Total	I	.8501	.1111	.0388
	II	.7798	.1356	.0846
	III	.6552	.1574	.1874
	IV	.7578	.1104	.1318
	V	-	.0400	-
Rural	I	.7876	.1226	.1098
	II	.7961	.1186	.0853
	III	.6055	.1375	.2570
	IV	.8710	.0936	.0354
	V	-	.0538	-
Urban	I	.8615	.1078	.0307
	II	.7773	.1378	.0849
	III	.6624	.1604	.1772
	IV	.7403	.1113	.1484
	V	-	.0370	-

Furthermore, the pupils of all communities in urban schools have shown better performance in terms of [illegible] than their counterparts in rural schools. And classwise dropout rates are higher in rural areas as compared to urban areas. However, no trend emerges in regard to promotee, repeater and dropout rates in the case of pupils belonging to Scheduled Castes.

Analysis of Efficiency

Some selected indicators already discussed in Chapter 2, have been used to summarise the main features of internal efficiency at the primary stage of education.

TABLE 8.3

Input/Output Ratio and Overall Dropout Rates

Sex/Area	Input/Output ratio		Overall dropout rate (%)	
	All	SC	All	SC
1	2	3	4	5
Boys	1.56	1.57	38.5	40.8
Girls	1.87	1.90	52.3	54.2
Total	1.68	1.62	44.9	43.3
Rural	2.01	1.59	62.5	47.2
Urban	1.63	1.63	40.9	43.2

Table 8.3 reveals that the overall dropout rate is acute in the case of total enrolment in rural schools (62.5%). It is also noticeable among girls of SC(54.2%) and all

communities (52.3%). The output rate is the lowest (38.5%) among boys of all communities.

Input/output ratio is higher among girls then in boys. The education system invested 68% more than the minimum pupil-years required for total enrolment.

Output by Number of Repeating Years

Table 8.4 gives percentage output by number of repeating years. The table clearly shows that slightly

TABLE 8.4

Percentage Output by Number of Repeating Years

Category	Years repeated	Percentage output				
		Boys	Girls	Total	Rural	Urban
1	2	3	4	5	6	7
All	0	50.08	50.52	51.17	50.93	50.93
	1	33.82	32.50	32.25	32.00	32.32
	2	12.52	12.79	12.61	12.27	12.86
	3	3.58	4.19	3.97	4.80	3.89
SC	0	57.41	50.44	55.73	57.55	55.81
	1	30.47	32.53	30.87	30.13	30.81
	2	9.76	12.88	10.58	9.52	10.56
	3	2.36	4.15	2.82	2.04	2.82

More than half of the pupils who completed the cycle did so without repeating any class, nearly one-third repeated one year and the remaining pupils repeated two to three years.

Promotees Profile

Promotees profile in respect of pupils of SC and all communities in rural and urban area is given in Table 8.5. The table shows that about 95% of the pupils who joined class I reached class II.

TABLE 8.5

Promotees Profile

Category	Sex/Area	I	II	III	IV	V
1	2	3	4	5	6	7
All	Boys	1000	932	850	735	615
	Girls	1000	940	803	622	477
	Total	1000	946	841	677	555
	Rural	1000	737	625	490	375
	Urban	1000	978	875	710	591
SC	Boys	1000	966	888	688	5[illegible]
	Girls	1000	[illegible]	768	[illegible]	453
	Total	1000	955	861	6[illegible]6	5[illegible]
	Rural	1000	876	790	554	[illegible]
	Urban	1000	966	869	684	468

This percentage is higher among pupils in urban schools as compared to rural schools. The table further reveals that about 56% of the pupils joining class I complete the cycle, percentages in rural and urban schools being 37.5 and 59.1 respectively.

Percentage of Pupil-years spent in Excess

Table 8.6 gives the pupil-years spent in excess along with their percentages with respect to total pupil-years invested in completing the cycle. The table reveals that the percentages of pupil-years spent in excess are higher for girls than for boys of SC and all communities. However, there does not seem to be any difference between the percentages for SC and all communities except in rural schools. This

TABLE 8.6

Pupil-years spent in Excess

Category	Item	Boys	Girls	Total	Rural	Urban
1	2	3	4	5	6	7
All	Optimum pupil-years to be invested	3075	2385	2775	1875	2955
	Total invested	4795	4461	4654	3760	4806
	Pupil-years spent in excess	1720	2076	[illegible]	[illegible]05	1851
	%of pupil-years spent in excess	35.87	46.54	40.37	50.13	38.51
SC	Optimum pupil-years to be invested	2970	2290	2835	2650	2840
	Total invested	4649	4347	4581	4216	4627
	Pupil-years spent in excess	1679	2057	1746	1566	1787
	% of pupil-years spent in excess	36.12	47.32	38.11	37.14	38.62

percentage is the highest (50.13%) among total enrolment in schools located in rural areas.

Attribution of the Pupil-years Spent in Excess

Category	Item	Boys	Girls	Total	Rural	Urban
1	2	3	4	5	6	7
All	Pupil-years spent in excess	1720	2076	1879	1885	1851
	Attributable to repeaters who completed the cycle	428 (24.88)	337 (16.23)	385 (20.49)	266 (14.11)	412 (22.25)
	Attributable to dropouts	1292 (75.12)	1739 (83.77)	1494 (79.51)	1619 (85.89)	1439 (77.74)
SC	Pupil-years spent in excess	1679	2057	1746	1566	1787
	Attributable to repeaters who completed the cycle	339 (20.19)	324 (15.75)	343 (19.64)	304 (19.41)	343 (19.19)
	Attributable to dropouts	1340 (79.81)	1733 (84.25)	1403 (80.36)	1262 (80.59)	1444 (80.81)

Note: Figures within parentheses indicate percentages with respect to pupil-years spent in excess.

The percentage of excess pupil-years attributable to dropouts is consistently high for pupils of 'All' and SC categories in both rural and urban schools. It ranges from 75.12% for boys of all communities to 85.89% for total enrolment in rural schools.

Excess Pupil-years Attributable to Dropouts but effective

Category	Boys	Girls	Total	Rural	Urban
1	2	3	4	5	6
All	670 (51.86)	932 (53.59)	799 (53.48)	727 (44.90)	790 (54.90)
SC	760 (56.72)	914 (52.74)	781 (55.67)	630 (49.92)	815 (59.44)

Note: Figures within parentheses indicate percentages with respect to excess pupil-years attributable to dropouts.

By and large, about half of the excess pupil-years attributable to dropouts may not be considered as the total wastage because the dropouts beyond class I utilised at least one or more years effectively before discontinuing their studies.

Conclusions

Input/output ratios and overall dropout rates are higher for girls than for boys of SC and all communities. Further, in the case of total enrolment, these indicators are higher in rural schools than in urban ones.

Out of the pupils completing the cycle, more than half of them completed it without repeating any class and the remaining ones repeated at least one year.

The percentages of pupil-years spent in excess are higher for girls than for boys of SC and all communities. Again, the percentage of excess pupil-years attributable to dropouts is consistently high in rural and urban areas in the case of all students irrespective of their sex and caste.

WEST BENGAL

The state of West Bengal came into existance as a result of Indian Independence Act 1947. The state was divided into 16 districts with an area of 88752 sq. km. Accordin to 1981 Census the population of the state was 5,45,80,647, of which 73.53% were living in rural areas. Its population ranking was 4th in the country, while otherwise it was ranked 12th in the country. The density of population per sq. km. was as high as 615. The ratio of females per 1000 males was 911.

The main occupation in the state is agriculture in which about 60% population is engaged. The state is a major producer of jute and tea. It has big as well as small industries The rural areas in the state are well connected with urban areas and among themselves by trains.

The state had a literacy rate of 40.81% which is higher than All India literacy rate of 36.23%. In case of male it was 50.67% while in case of females it was 30.25%. Although about 73% population lived in rural areas, literacy rate in rural areas was 33.12% as compared to 62.66% in urban areas.

The Fourth All-India Educational Survey had revealed that the state had a provision of primary schooling facilities to 85.07% rural population within the habitation. This facility was available to 96.28% population within a walking

distance of 1 km. In Fifth All India Education Survey facilities decreased to 72.62% rural population habitation and increased to 97.38% within a walking distance of 1 km. Although a majority of population had primary schooling facility within a walking distance of 1 km. only 67.60% of the children in the age group 6 to below were in schools.

Selection of Schools from rural areas

For this purpose the state was divided firstly into 3 divisions namely Jalpaigury, Presidency and Burdwan. Then to each division, number of circules to be selected were allocated using proportional allocation method. Thus 20 circules were allocated to Jalpaiguri, 20 to Presidency and 19 to Burdwan division. These circules were then selected from total circles in the division using probability proportional to size with replacement sampling scheme, size being the number of primary schools/sections in the circle. Then from each selected circle 12 schools using simple random sampling without replacement (SRSWOR) were selected. The number of circles and schools selected from each division is given below:

Division	No. of cicles selected			No. of schools selected
	Non-Tribal	Tribal	Total	
Jalpaiguri	16	4	20	240
Presidency	17	3	20	240
Burdwan	11	8	19	228
	44	15	59	708

Selection of schools from urban areas

In urban areas towns/cities were [illegible] first stage sampling unit. These were selected using probability proportional to size with replacement sampling scheme, size being the population of the city/town. As already discussed the state was divided into 5 categories of towns/cities after combining 5 and 6 category. The selection of schools in each selected town/city was done using simple random sampling procedure. The number of towns selected under each category and schools selected from them are as given below:

Category of Town	No. of towns selected	Schools selected
I	3	72
II	3	48
III	4	24
IV	[illegible]	28
V & VI	3	198

Schools covered under the study

After scrutiny of questionnaire and validation of data estimates of promotees, repeaters and drop outs were calculated

on the basis of schools given below.

Division/category of Town	Schools covered	
	Rural	Urban
Jalpaiguri	236	-
Presidency	238	-
Burdwan	226	-
Class I	-	60
Class II	-	40
Class III	-	22
Class IV	-	21
Class V and VI	-	37
Total	700	180

Promotees, Repeaters and Dropouts

Table 9.1, 9.2 and 9.3 give the promotee repeater and dropout rates for children belonging to all communities (All), scheduled caste and scheduled tribe separately for boys, girls and total (boys + girls) and also for rural and urban areas. These rates have been calculated on the basis of 700 schools covered in the study from rural areas and 180 schools from urban areas.

TABLE 9.1

Promotee, Repeater and Dropout Rate

STATE : WEST BENGAL CATEGORY: ALL

Sex/Area	Class	Promotee Rate	Repeater Rate	Dropout Rate
1	2	3	4	5
Boys	I	.3268	.5042	.1690
	II	.6972	.1684	.1344
	III	.6957	.1818	.1223
	IV		.1078	
Girls	I	.3035	.4276	.2689
	II	.7018	.1701	.1281
	III	.7127	.1784	.1089
	IV		.1058	
Total	I	.3176	.4741	.2083
	II	.6988	.1690	.1322
	III	.7021	.1806	.1173
	IV		.1072	
Rural	I	.3035	.5252	.1713
	II	.6782	.1840	.1378
	III	.6931	.1940	.1127
	IV		.1092	
Urban	I	.3578	.3249	.3173
	II	.7461	.1342	.1197
	III	.7206	.1525	.1269
	IV		.1033	

TABLE 9.2

Promotee, Repeater and Dropout Rates

STATE: WEST BENGAL CATEGORY: S.C.

Sex/Area	Class	Promotee Rate	Repeater Rate	Dropout Rate
1	2	3	4	5
Boys	I	.3255	.4721	.2024
	II	.6504	.1866	.1630
	III	.6747	.1796	.1457
	IV	-	.1091	-
Girls	I	.3331	.4850	.1819
	II	.6284	.2070	.1646
	III	.5963	.1881	.2046
	IV	-	.1364	-
Total	I	.3281	.4766	.1953
	II	.6423	.1929	.1648
	III	.6481	.1861	.1658
	IV	-	.1193	-
Rural	I	.3285	.4091	.2124
	II	.6340	.1996	.1664
	III	.6370	.1837	.1793
	IV	-	.1184	-
Urban	I	.4734	.4137	.1129
	II	.6714	.1664	.1622
	III	.6837	.1922	.1241
	IV	-	.1213	-

TABLE 9.3

Promotee, Repeater and Dropout Rates

STATE: WEST BENGAL CATEGORY : S.T.

Sex/Area	Class	Promotee Rate	Repeater Rate	Dropout Rate
1	2	3	4	5
Boys	I	.3059	.4381	.2560
	II	.5094	.2125	.2781
	III	.5556	.2146	.2298
	IV	-	.1216	-
Girls	I	.2441	.5132	.2427
	II	.4342	.2857	.2801
	III	.6363	.2751	.0886
	IV	-	.1575	-
Total	I	.2983	.4506	.2521
	II	.4893	.2315	.2791
	III	.5754	.2296	.1950
	IV	-	.1304	-
Rural	I	.2568	.4976	.2456
	II	.4317	.2670	.3013
	III	.4872	.2771	.2357
	IV	-	.1731	-
Urban	I	.4923	.2010	.3062
	II	.6903	.1076	.2021
	III	.7370	.1413	.1217
	IV	-	.0832	-

These tables reveal that the promotees rate increases between class I and class II and then it [illegible] in class IV. This is true for boys as well as girls in case of all the categories. It is interesting to note that in class IV promotees rate of SC students are higher than that of students belonging to all communities for boys as well as girls. Also ST students promotee rate in class IV is higher than that of 'All' and SC in all the categories except in urban areas.

The repeater rate is maximum in class I and the minimum in class IV, among all the categories of boys and girls as well as in rural and urban areas. Also it is higher in all classes in schools of rural areas as compared to corresponding classes in urban schools.

The drop out rate is again found to be maximum in class I amongst pupils of 'All' communities and SC communities the only exception is urban areas. While in case of ST the drop out rate is maximum in class II the only exception is urban areas. Comparing rural and urban areas we find that drop out rate in class I is more in urban areas as compared to rural areas amongst 'All' and ST pupils while in case of SC pupils it is reverse. Although promotee rates for different classes of boys and girls do not differ appreciably in any category and urban areas. Table 9.4 shows that more boys have been promoted and also between/than girls as compared to in all the classes amongst pupils of All and ST communities. In case of SC pupils more girls have been promoted as compared to boys in

in class I and class III, but in class IV again boys surpasses girls. Comparing rural and urban areas, we find that more pupils being promoted in rural areas in case of 'All' while the case is reversed for SC and ST pupils.

TABLE 9.4

Promotee Profile

Category	Sex/ Area	Classes			
		I	II	III	IV
All	Boys	1000	617	508	421
	Girls	1000	514	427	364
	Total	1000	574	474	397
	Rural	1000	591	478	403
	Urban	1000	525	449	378
SC	Boys	1000	587	459	370
	Girls	1000	611	472	342
	Total	1000	596	464	362
	Rural	1000	551	426	325
	Urban	1000	784	623	518
ST	Boys	1000	525	333	230
	Girls	1000	466	271	227
	Total	1000	509	316	229
	Rural	1000	481	273	175
	Urban	1000	616	476	408

From the rates calculated above flow charts have been prepared to show class to class movement of which are given in the appendix. With the help of these

flow charts different indicies of wastage and stagnation have been calculated which will be discussed below.

Input/Output Ratios and Overall Dropout Rates

These two indicies together give the idea of wastage of resources in education. Input/Output ratio give the extent of resource over-employed in an educational system than the minimal required. While overall dropout rates give the percentage of pupils who have completed the cycle in relation to those who enter the class I.

Sex/Area	Input/Output ratio			Overall dropout rate(%)		
	All	SC	ST	All	SC	ST
Boys	2.19	2.34	3.30	57.9	63.0	77.0
Girls	2.42	2.60	3.71	63.6	65.8	77.3
Total	2.40	2.42	3.35	60.3	63.8	77.1
Rural	2.28	2.61	4.38	59.7	67.5	82.5
Urban	1.99.	1.89	[illegible]	62.2	[illegible]	59.4

From this table we infer that the wastage of resources is maximum in case of rural ST children, where 338% more resources have been invested on the other hand the number of pupils who have completed the cycle were only 17.5%. This table also reveals that more resources have been wasted in case of girls as compared to boys amongst all the categories of students. Also more resources have been invested

than minimum required for [illegible] dropout in rural areas as compared to urban areas and [illegible] all the categories of students.

The overall dropout rate is maximum in case of rural ST children where 82.5% children dropout before completing the cycle. Again comparing boys and girls we find that dropout rates are higher among girls as compared to boys in all the categories. The rural and urban comparison shows that dropouts are more in rural areas as compared to urban areas in SC and ST communities. While in case of 'All' dropouts are more in urban areas.

Percentage Output by Number of Repeating Years

This indicator give the distribution of the percentage of students who have completed the cycle in one or more than one attempt.

Category	Years repeated	Percentage Output				
		Boys	Girls	Total	Rural	Urban
All	0	33.73	[illegible]	35.0	[illegible]	[illegible].16
	1	32.30	32.69	32.49	32.01	30.15
	2	20.67	19.23	20.40	22.08	21.32
	3	13.30	10.71	12.09	14.39	6.37
SC	0	34.32	31.29	33.43	32.31	36.87
	1	32.43	32.75	32.32	32.62	32.82
	2	20.81	21.64	20.99	21.54	19.50
	3	12.43	14.32	13.26	13.54	10.81
ST	0	33.04	25.11	30.84	25.14	56.40
	1	34.04	31.28	32.16	31.43	30.30
	2	20.08	24.67	22.03	24.57	10.10
	3	13.04	18.94	14.97	18.86	3.20

The above table reveals that about one-third pupils completed the cycle in the first attempt amongst all categories of students and about another one-third completed it after repeating for a year. While the rest completed repeating it either for 2 years or for 3 years. We also find that more pupil complete the cycle in the first attempt in urban areas as compared to rural areas in all the categories.

Percentage of Pupil-Years Spent in Excess

This table gives the total number of years invested as well as optimum years required to be invested and then the percentage of pupil years spent in excess, taken in completing the cycle. This have been calculated on the assumption that the output of the system has not required repetition.

CO TD...../-

Category		Boys	Girls	Area	Rural	Urban
All	Optimum pupil/years to be invested	1684	1455	1598	1612	1512
	Total invested	3686	3517	3810	3679	3013
	Pupil-years spent in excess	2002	2061	2222	2067	1501
	%of pupil-years spent in excess	54.31	58.60	58.32	56.18	49.82
SC	Optimum pupil/years to be invested	1480	1368	1448	1300	2072
	Total invested	3467	3550	3497	3392	3924
	Pupil-years spent in excess	1987	2180	2049	2092	1852
	%of pupil-years spent in excess	57.31	61.46	58.59	61.67	47.20
ST	Optimum pupil/years to be invested	920	908	916	700	1624
	Total invested	3038	3371	3071	3066	2935
	Pupil-years spent in excess	2118	2463	2165	2366	1311
	%of pupil-years spent in excess	69.72	73.06	70.17	77.17	44.67

This table reveals that percentage of pupil-years spent in excess is less in case of 'All' as compared to SC and ST. The higher percentage of pupil-years have been spent in case of rural areas as compared to urban areas among 'All'

category pupils. Comparing urban areas among 'All', SC and ST categories we find that the [illegible] of pupil [illegible] in excess is more in case of 'All' (49.82) as compared to SC (47.20) and ST (44.67).

Attribution of Pupil-Years spent in Excess

The pupil-years spent in excess can be attributed either to (i) to repeaters who have completed the cycle after repeatition (ii) or due to dropouts. In this table the years attributed to these two categories have been discussed.

Category		Boys	Girls	Total	Rural	Urban
All	Pupil-years spent in excess	2002	2061	2222	2067	1501
	Attributable to repeaters who have completed the cycle	478	376	435	481	375
	Dropouts	1524	1685	1787	1586	1126
SC	Pupil-years spent in excess	1987	2180	[illegible]	2092	1852
	Attributable to repeaters who have completed the cycle	412	407	413	378	540
	Drop-outs	1575	1773	1636	1714	1312
ST	Pupil-years spent in excess	2118	2463	2155	2366	1311
	Attributable to repeaters who have completed the cycle	262	454	275	240	244
	Drop-outs	1856	2009	1880	2126	1067

This table reveals that more pupil-years have been spent on dropouts on SC and ST [illegible] comparison to [illegible] from 'All'. It also reveals that more pupil-years on dropouts are spent in rural areas in comparison to urban areas. Also more years on girls dropouts have been spent in comparison to boys dropouts in case of all categories of pupils.

Excess Pupil-years attributable to Dropouts But Effective

The dropouts can be classified into two categories:

I Those dropouts who have left schools even before completing 1st year of study.

II Those who have discontinued their studies after passing atleast class I. The table given below gives the pupil-years attributed to those dropouts who have passed atleast class I.

Category	Boys	Girls	Total	Rural	Urban
All	862 (56.56)	4[illegible] (50.39)	857 ( )	860 (54.22)	840 (74.60)
SC	936 (59.43)	1057 (59.62)	974 (59.54)	1002 (58.46)	853 (65.02)
ST	1168 (62.93)	1056 (57.56)	1138 (60.53)	1209 (57.91)	874 (81.91)

The above table reveals that more than 50% of the excess years attributable to dropouts have been effective. This percentage is more in case of urban areas as compared to rural areas. It also reveals that excess pupil-years attribu-

table to dropouts but effective are not different in case of 'All', SC or ST.

Conclusion

The state has a high dropout rate amongst pupils of all categories with more than 57.9% children dropping out of schools before completing primary stage. It is as high as 82.5% amongst ST rural children. It is also noted that girls dropouts are higher than boys amongst all categories of children. Also dropout is higher in urban areas amongst 'All' while in case of SC and ST pupils it is higher in rural areas.

The state has a high stagnation with only 1/3rd of pupil completing the cycle in first attempt. The internal efficiency of the system is quite low. The low internal efficiency with high dropouts and stagnation result into high amount of wastage.

APPENDIX-I

STUDY ON STAGNATION AND DROP-OUTS AT PRIMARY STAGE

Instructions for filling the Proforma

Please read the following instructions carefully before filling the profoma:-

Use ball- point pen for filling the proforma.

Numerical information sought in the proforma is to be supplied in International Numerals, eg. 1, 2, 3, 4 etc.

Item 7: (i) The schools run by State or Central Government, Public Undertakings, and Autonomous Organizations completely financed by the Government will be treated as government schools.

(ii) The Schools run by municipal corporations, municipal committes, notified area committees, Zila Parishads, Panchayat Samities, etc. will be treated as local body schools.

A tick mark (✓) is to be put within brackets against the answer choice applicable to your schools in items 7 & 9.

Item 9: (i) A school is 'School for Boys' if boys are admitted to all classes and admission of girls is restricted to some specific classes only.

ii) A school is 'School for Girls' [illegible] are admitted to all classes but admission of boys is restricted to some specific classes only.

(iii) A school is 'Co-educational' if both boys and girls are admitted to all classes in the school.

Item 11: (i) New Entrants -: Those pupils who were not studying in recognised schools of the State in the previous year will be treated as new entrants. Students seeking admission with Transfer Certificate from a recognised school of your state are not to be treated as new entrants.

(ii) Promotees-Those pupils who passed/promoted from the previous class from any recognised school of the state will be treated as promotees.

(iii) Repeaters-Those who have failed/retained in the same class from any recognised school of the state will be treated as repeaters.

Study on Stagnation and Drop-outs at Primary Stage

1. State ... ...

2. District ... ...

3. Block/Tahsil ... ...

4. Village/Town ... ...

5. Population of the Village/Town according to 1981 Census.

Category	Total Population
All Communities	
Scheduled Castes	
Scheduled Tribes	

6. Name of the School ... ...

7. (a) School management :

(i) Government ( )

(ii) Local body ( )

(iii) Private aided ( )

(iv) Private unaided ( )

8. Classes taught in the school :

From class ... ... to class ... ...

9. Type of School :

(i) Boys ( )

(ii) Girls ( )

(iii) Co-educational ( )

10. Give information about incentive schemes for students of Primary classes in your school

Incentive Scheme	Whether School has the scheme Yes/No	If yes in col. 2, year in which introduced
1	2	3
1. Free Uniforms		
2. Free Text-books		
3. Mid-day-Meals		
4. Attendance Scholarship for girls		

11. Furnish the following information regarding enrolment of pupils for the last three years as on 30th September.

All Communities/Scheduled Castes/Scheduled Tribes

Class	Category	1979-80		1980-81		1981-82	
		Total	Girls	Total	Girls	Total	Girls
1	2	3	4	5	6	7	8
I	New Entrants						
	Repeaters						
	Total						
II	New Entrants						
	Promotees						
	Repeaters						
	Total						
III	New Entrants						
	Promotees						
	Repeaters						
	Total						
IV	New Entrants						
	Promotees						
	Repeaters						
	Total						
V	New Entrants						
	Promotees						
	Repeaters						
	Total						

12. Furnish the classwise information on number of students who appeared and promoted, for the last three years.

Pupils of All Comrittees/Scheduled Castes/ Scheduled Tribe.

Class		1979-80		1980-81		1981-82	
		Appe-ared	Promo-ted	Appe-ared	Promo-ted	Appe-ared	Promo-ted
I	Total						
	Girls						
II	Total						
	Girls						
III	Total						
	Girls						
IV	Total						
	Girls						
V	Total						
	Girls						

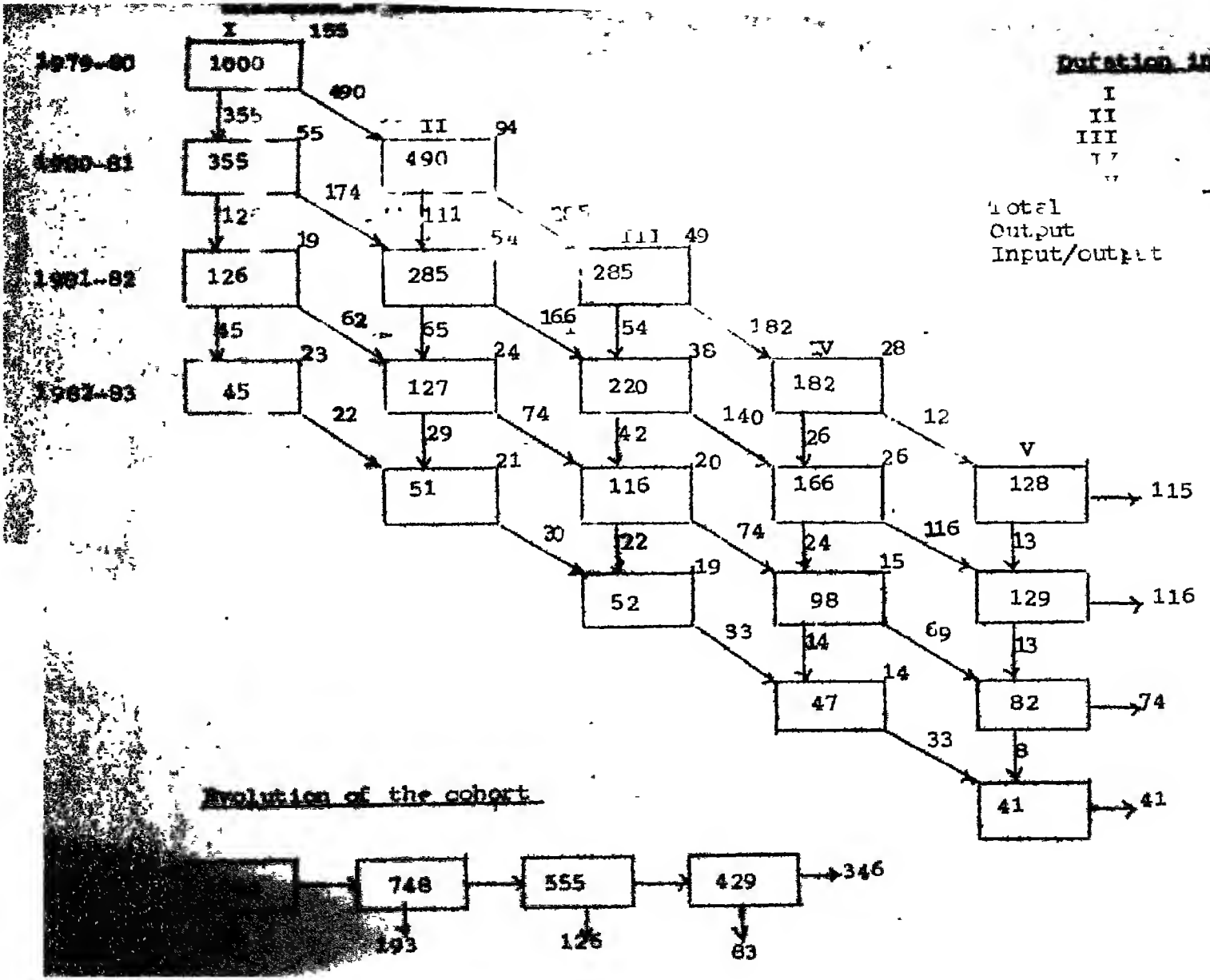

Duration in years

I	1526
II	953
III	673
IV	493
V	380
Total	4025
Output	346
Input/output	2.33

Evolution of the cohort

12. Furnish the classwise information on number of students who appeared and promoted, for the last three years.

Pupils of All Comitees/Scheduled Castes/ Scheduled Tribes

Class		1979-80		1980-81		1981-82	
		Appe-ared	Promo-ted	Appe-ared	Promo-ted	Appe-ared	Promo-ted
I	Total						
	Girls						
II	Total						
	Girls						
III	Total						
	Girls						
IV	Total						
	Girls						
V	Total						
	Girls						

[illegible]

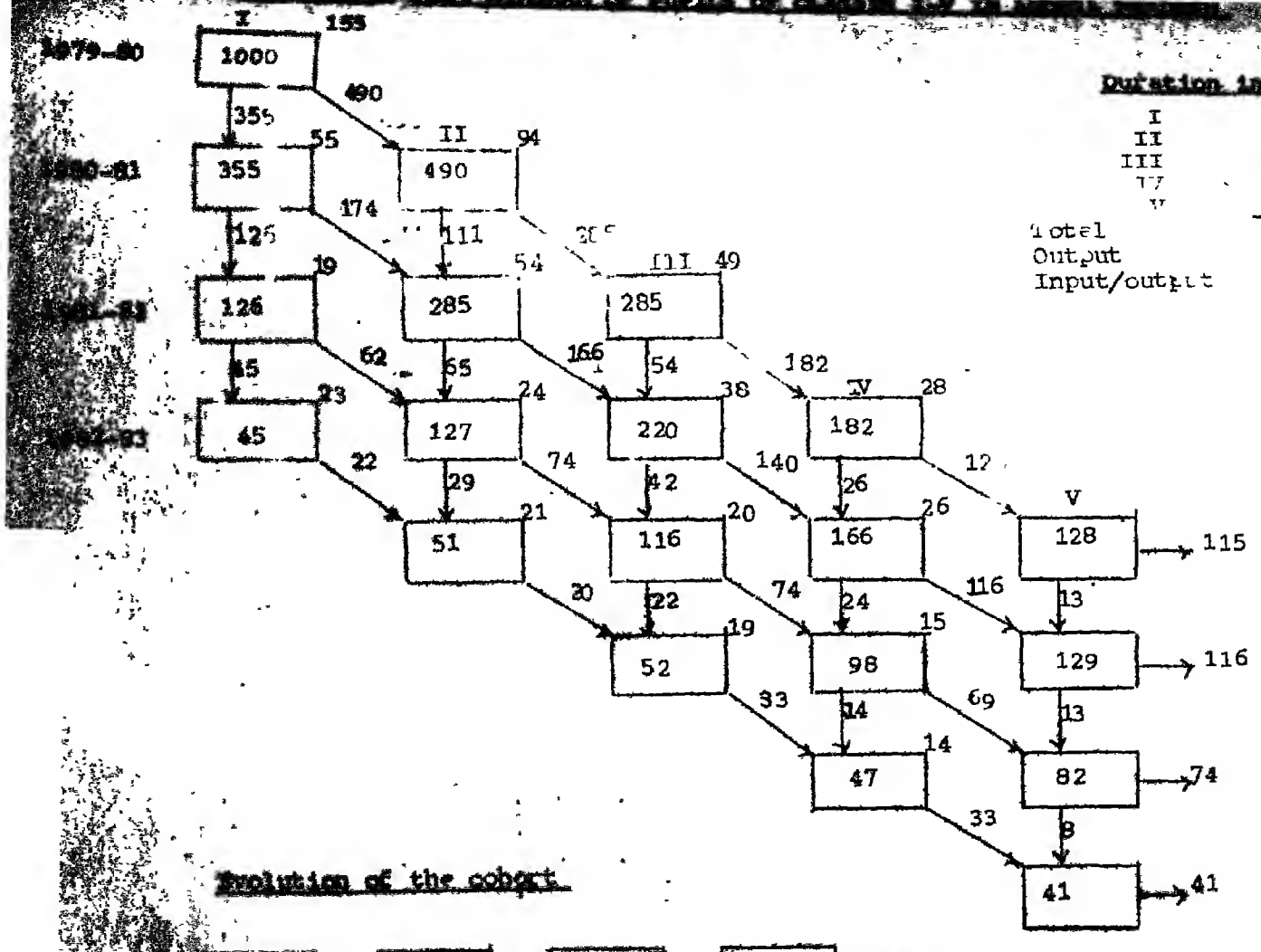

Duration in years

I	1526
II	953
III	673
IV	493
V	380
Total	4025
Output	346
Input/output	[illegible]

Evolution of the cohort

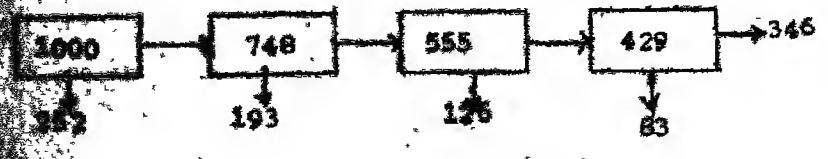

APPENDIX 3: FLOW DIAGRAM OF PUPILS OF CLASSES I-IV IN ASSAM

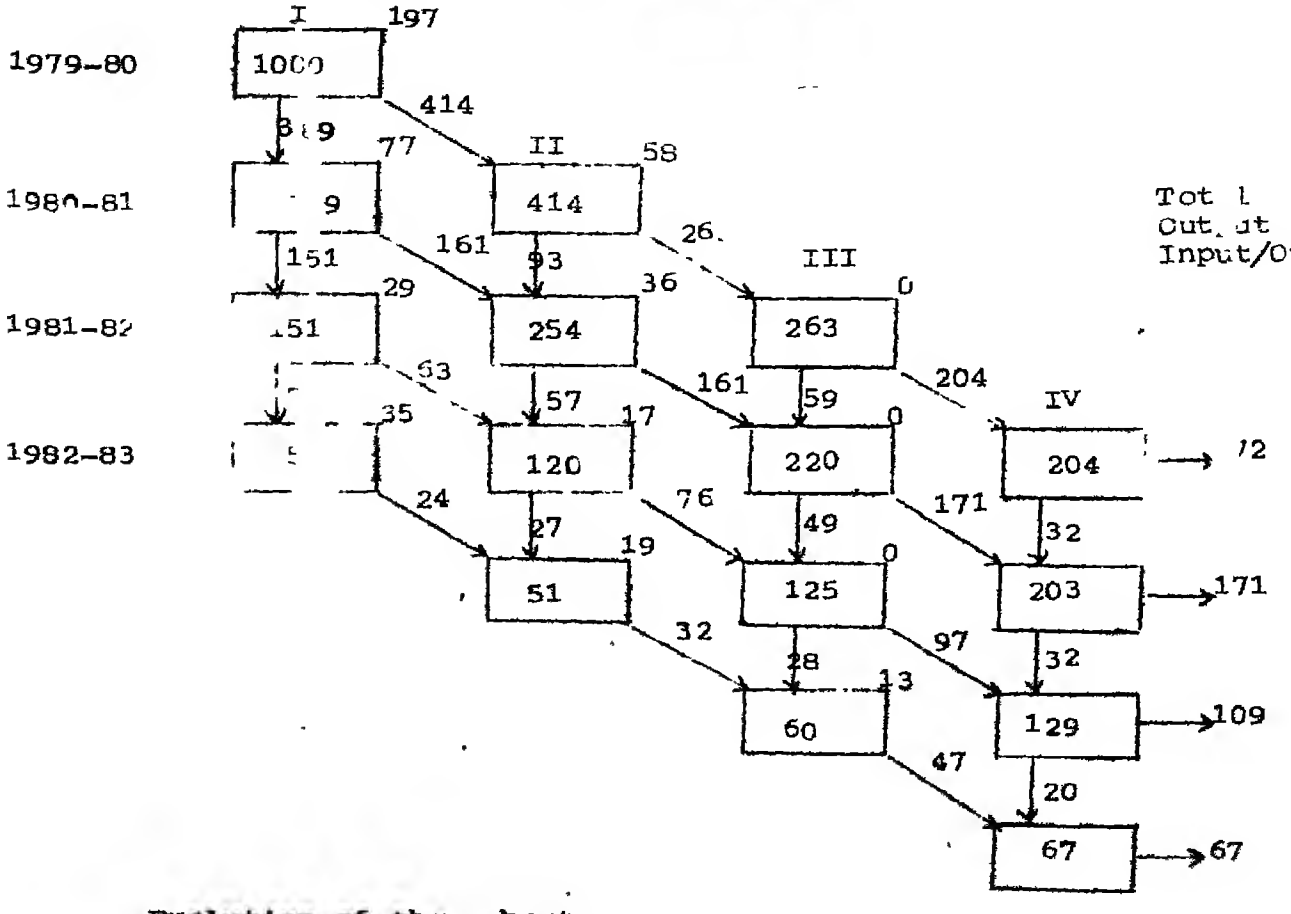

Duration in years	
I	1599
II	839
III	668
IV	[illegible]
Total	3709
Output	519
Input/Output	1.79

Evolution of the cohort

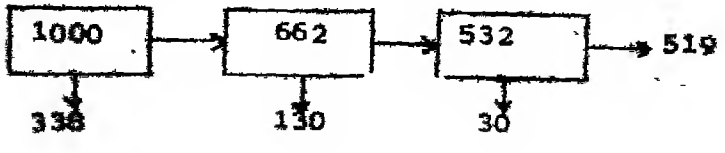

APPENDIX : FLOW DIAGRAM OF PUPILS OF CLASSES I - V IN PRIMARY

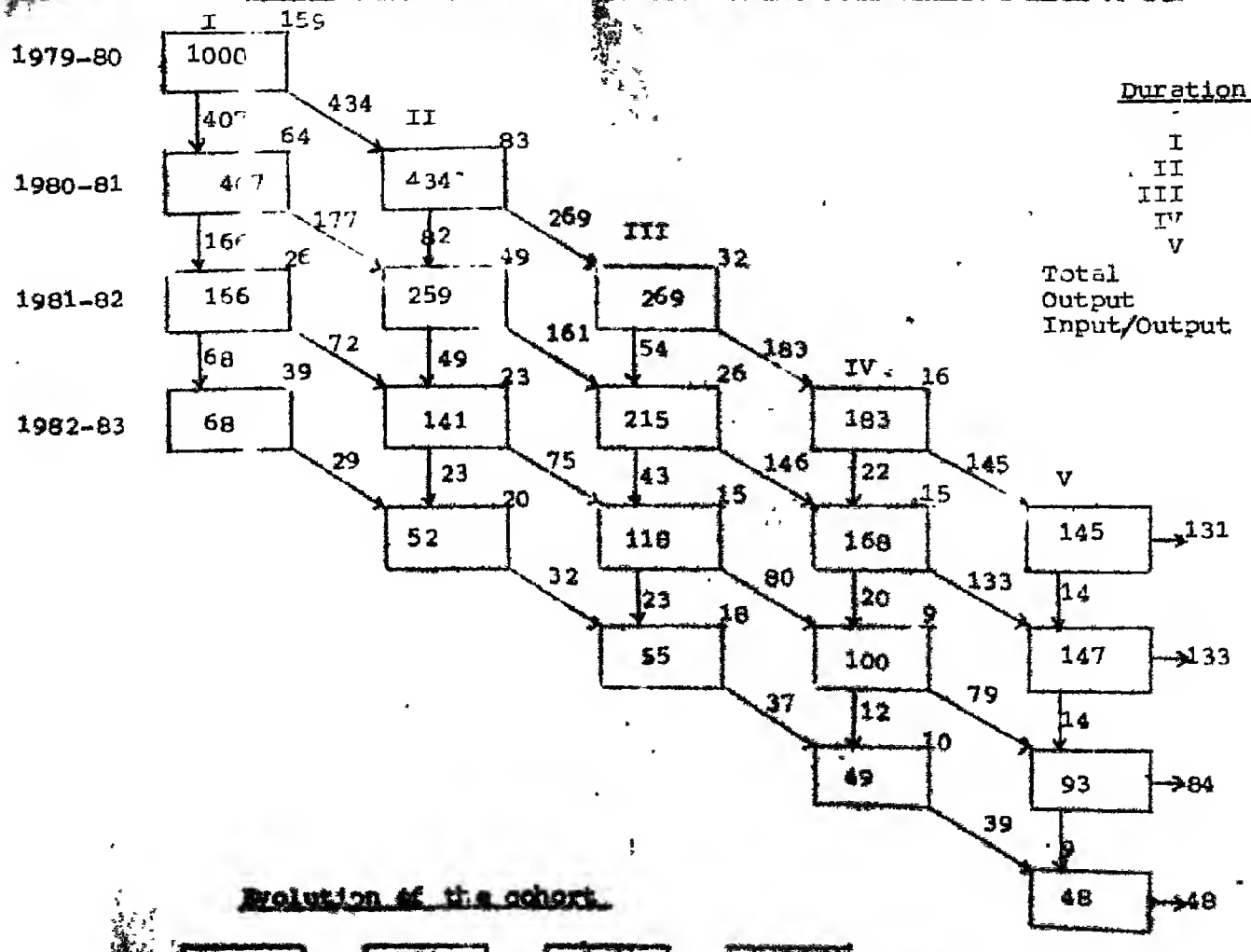

Duration in years	
I	1641
II	866
III	657
IV	500
V	433
Total	4097
Output	396
Input/Output	2.07

Evolution of the cohort.

APPENDIX 5: FLOW DIAGRAM OF PUPILS OF CLASSES I-V IN JAMMU & KASHMIR

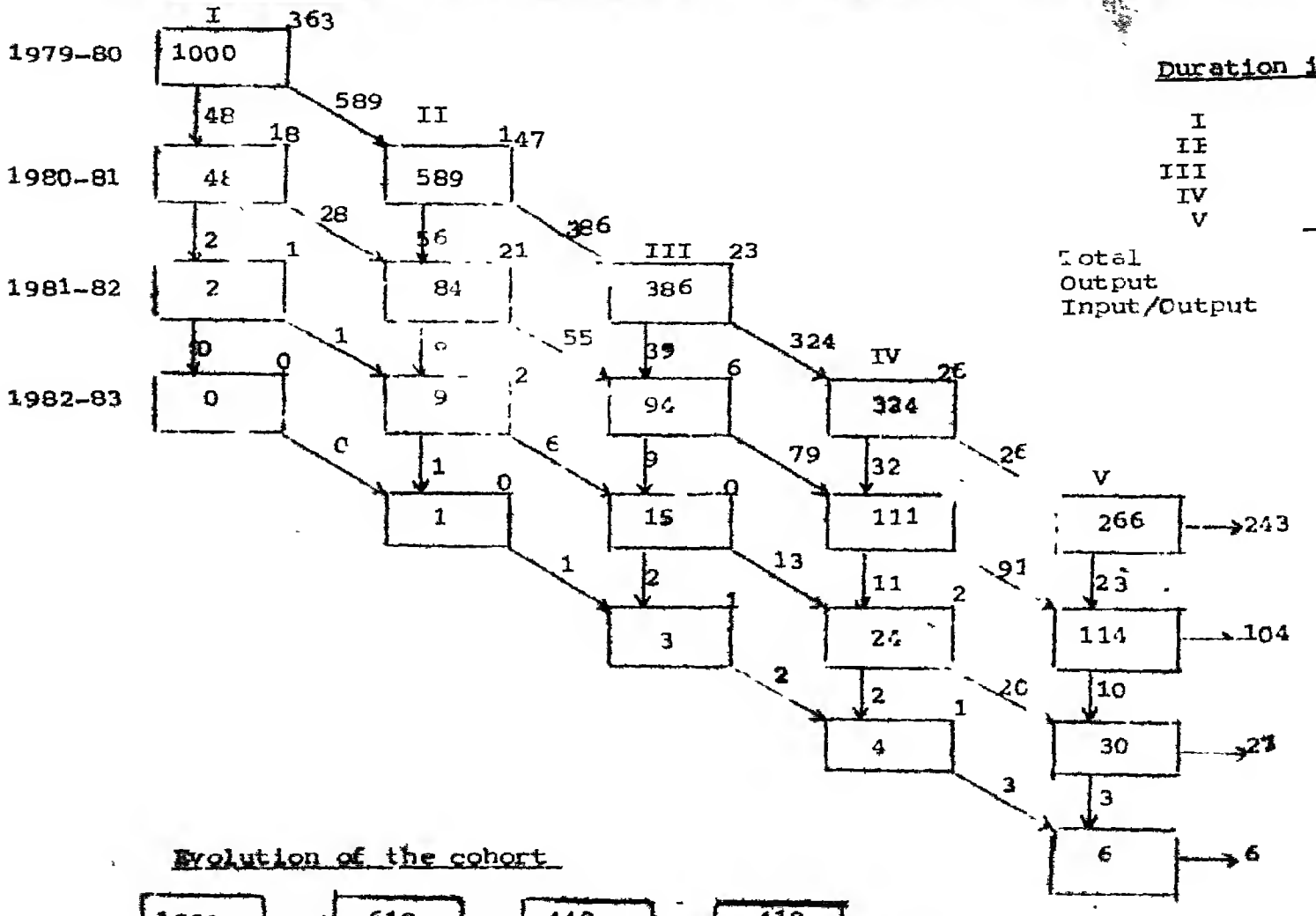

Duration in years	
I	1050
II	683
III	480
IV	463
V	416
Total	3092
Output	380
Input/Output	1.63

APPENDIX 6: FLOW DIAGRAM OF PUPILS OF CLASSES I-V IN MADHYA PRADESH

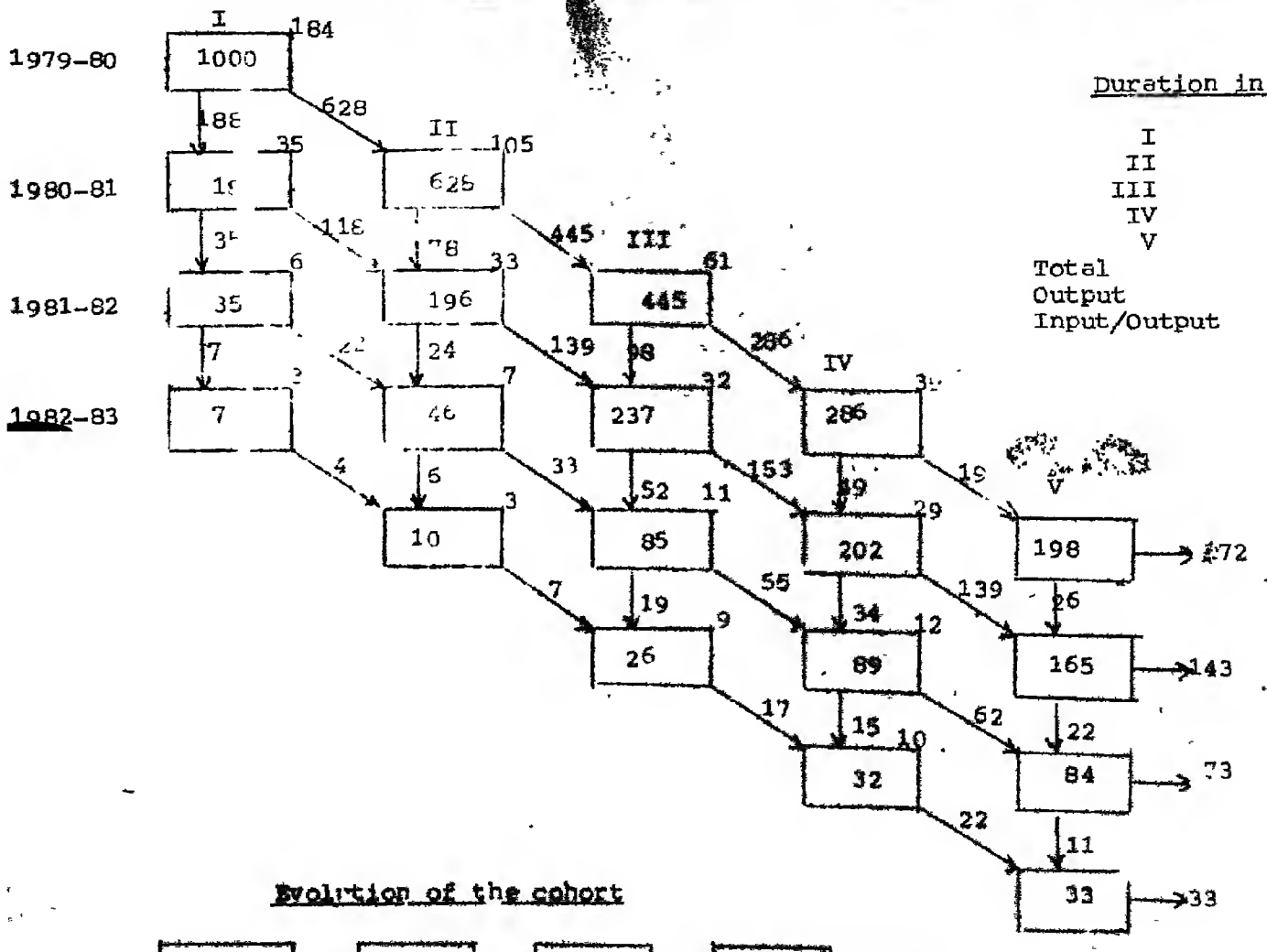

Duration in years

I	1230
II	880
III	793
IV	609
V	480
Total	3992
Output	421
Input/Output	1.90

Evolution of the cohort

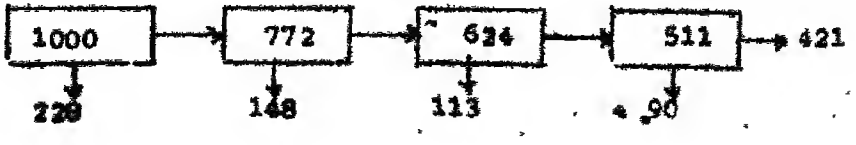

APPENDIX 7: FLOW DIAGRAM OF PUPILS OF CLASSES I-V IN ORISSA

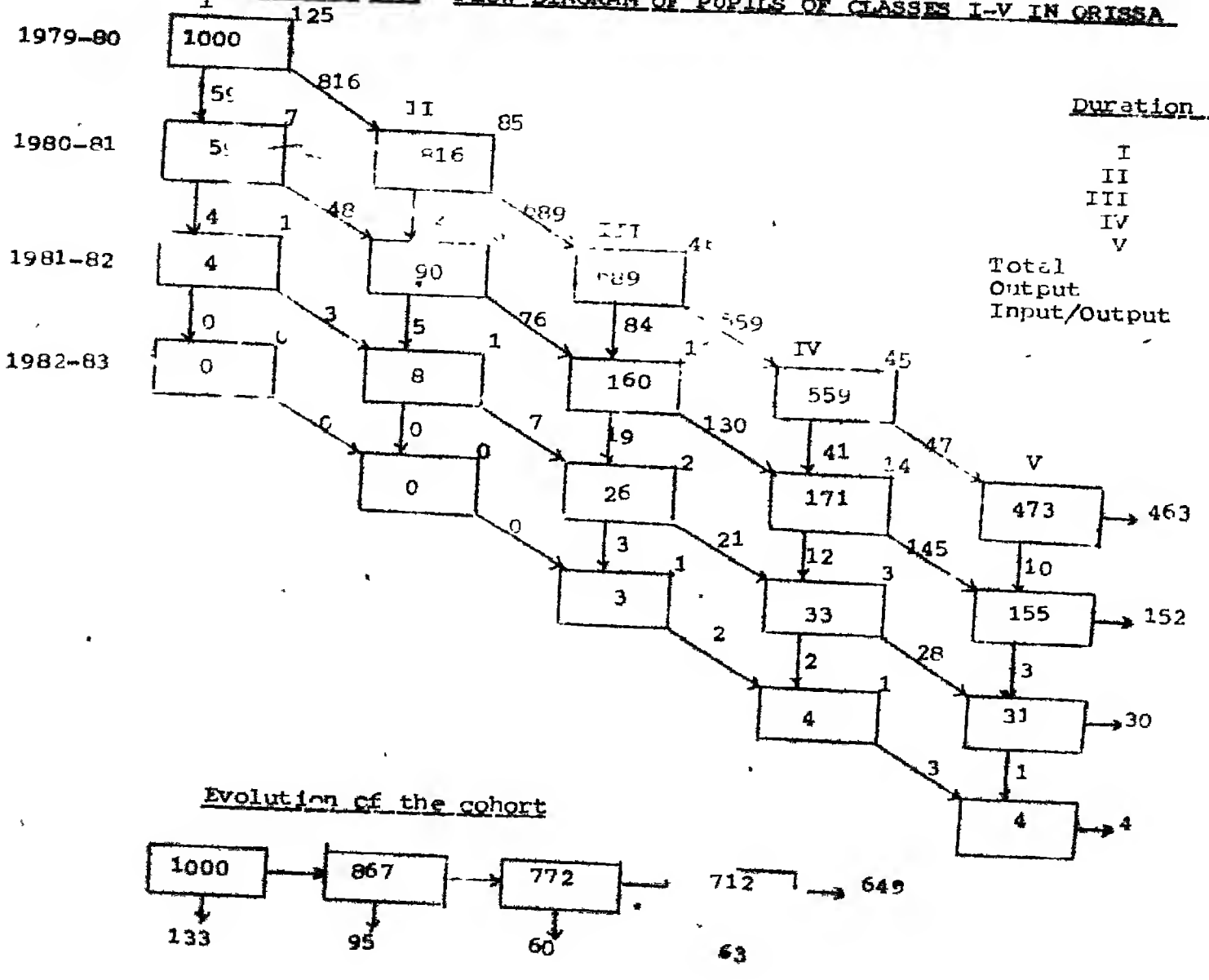

Duration in years	
I	1063
II	914
III	878
IV	767
V	663
Total	4285
Output	649
Input/Output	1.32

Evolution of the cohort

APPENDIX 8: FLOW DIAGRAM OF PUPILS OF CLASSES III-V IN RAJASTHAN

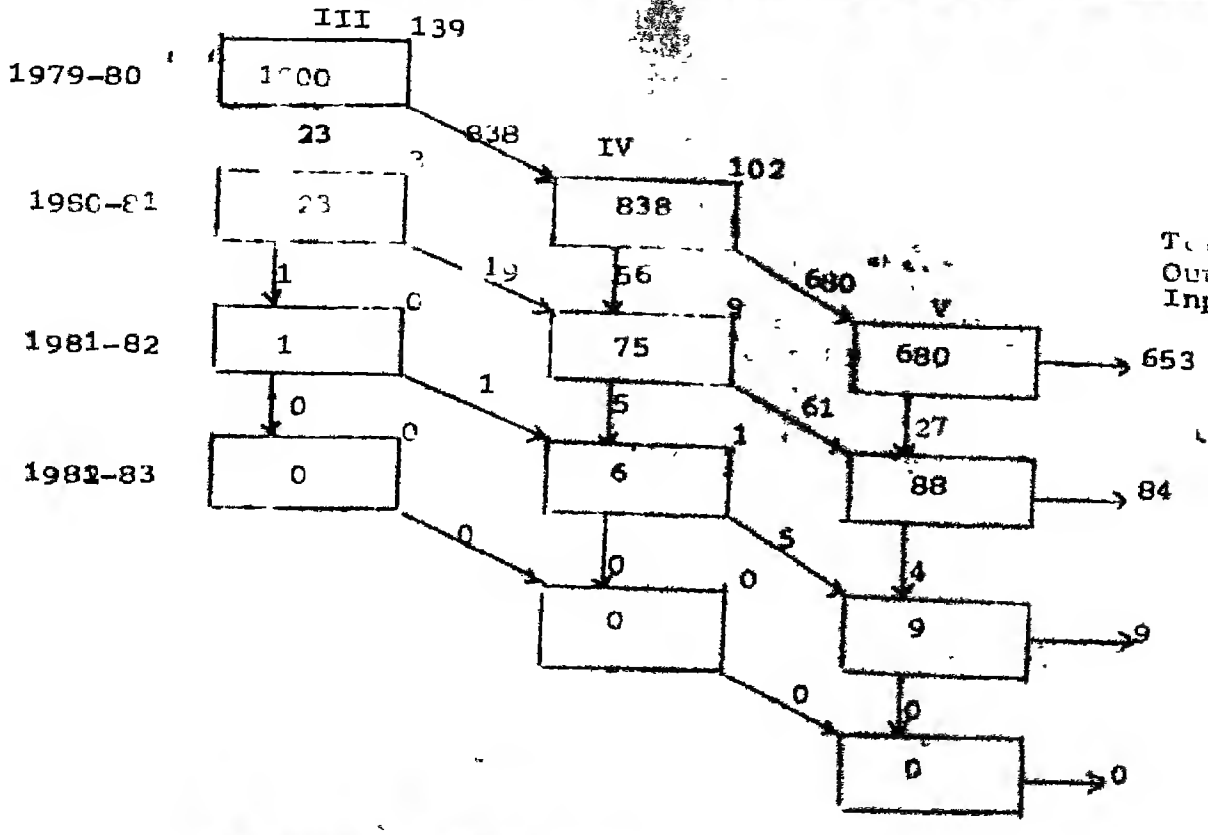

Duration in years	
III	1024
IV	919
V	777
Total	2720
Output	746
Input/Output	1.22

Evolution of the cohort

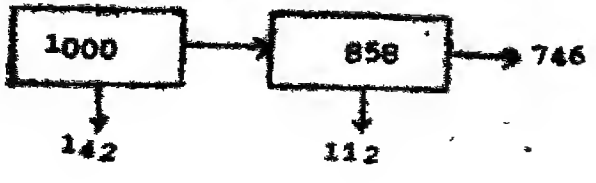

APPENDIX 9: FLOW DIAGRAM OF PUPILS OF CLASSES I-V IN UTTAR PRADESH

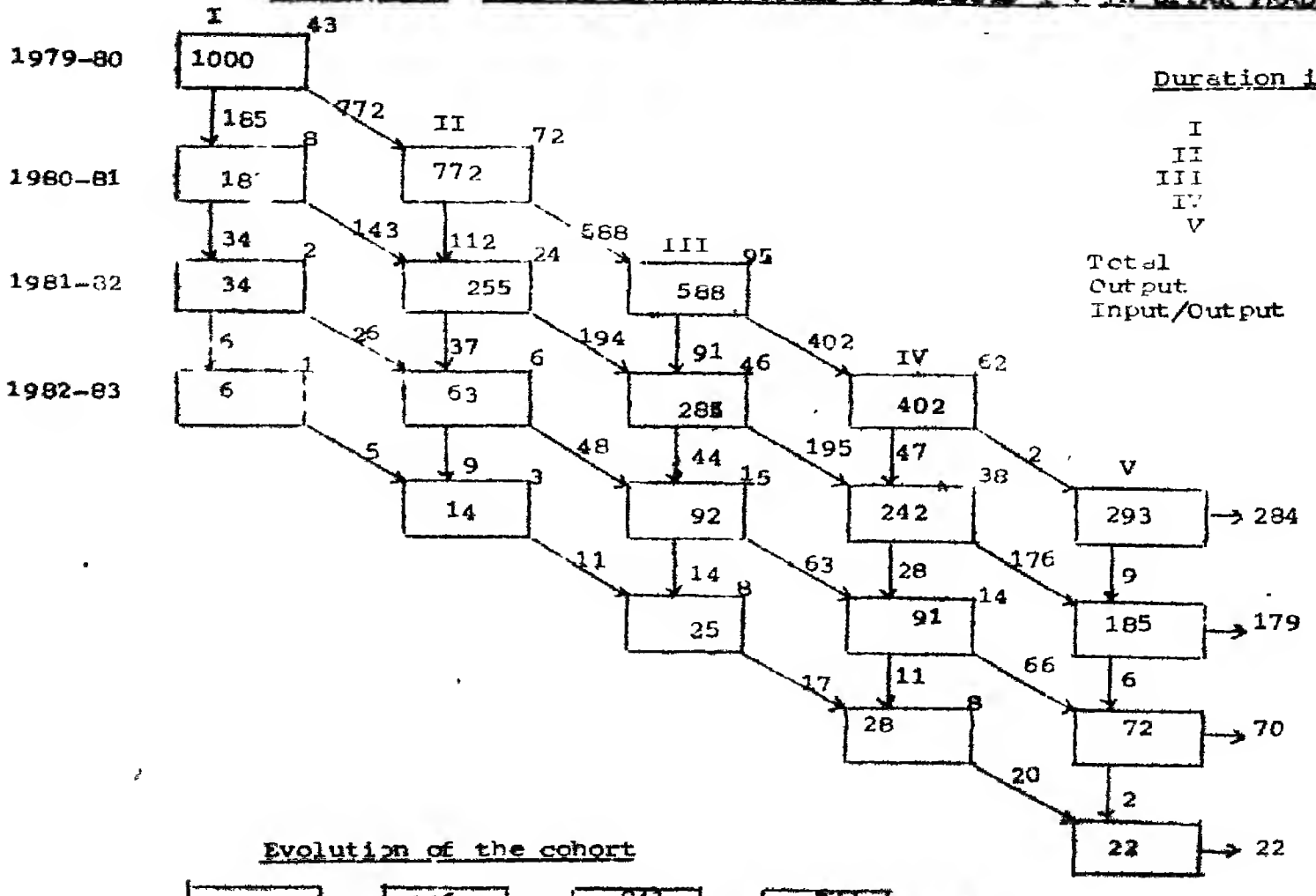

APPENDIX 10: FLOW DIAGRAM OF PUPILS OF CLASSES I-IV IN WEST BENGAL

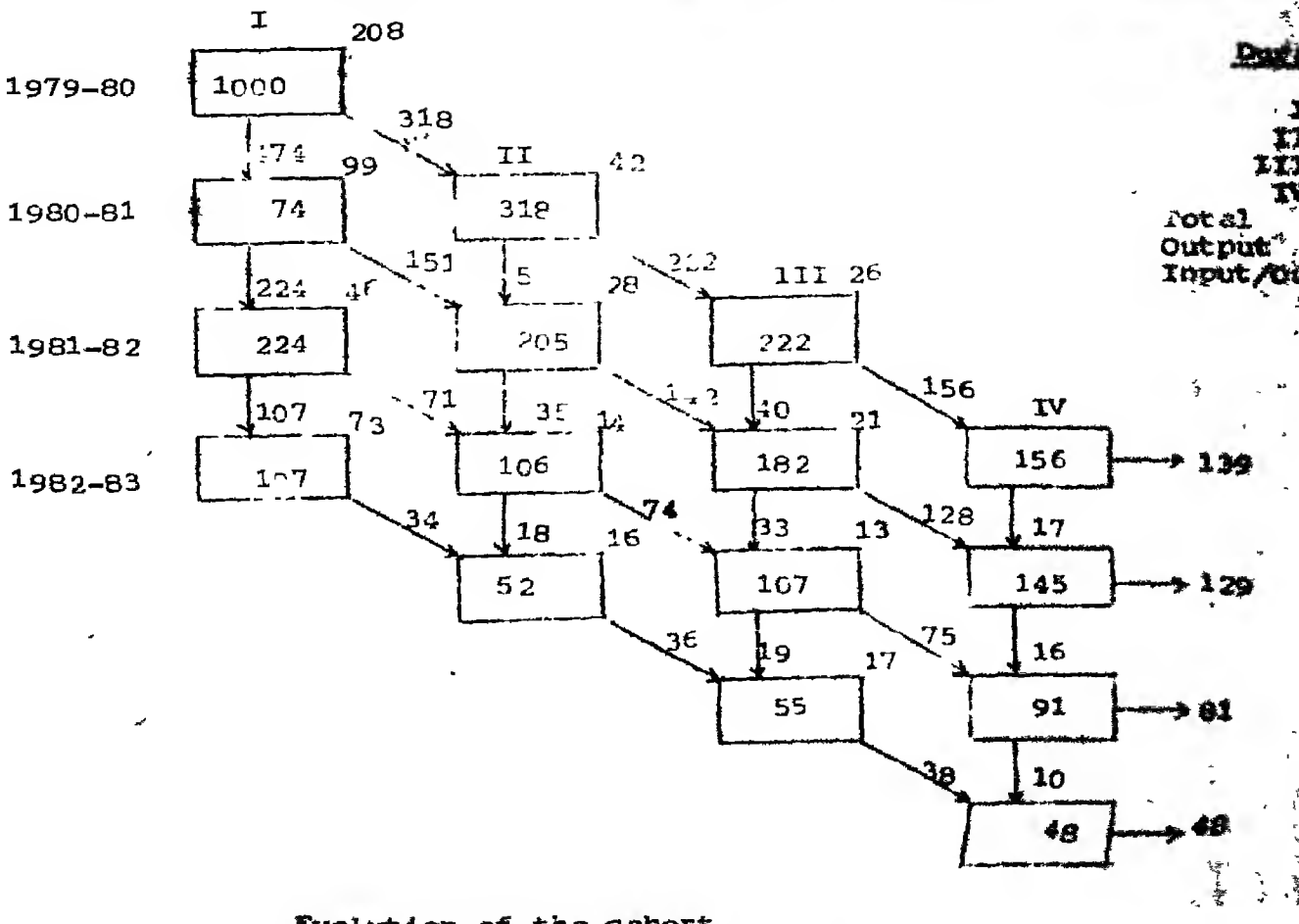

LIST OF PROJECT COORDINATORS IN DIFFERENT STATES

ANDHRA PRADESH

Sh. G.Manohar Rao
Additional Director of
School Education,
Andhra Pradesh, Hyderabad. — Upto October,83

Sh. P.Venka Reddy
Additional Director of School Education, — November,83 to Jan.84
Andhra Pradesh, Hyderabad.

Sh.A.Krishna Murthy,
Additional Director of School Education, — From January,84
Andhra Pradesh, Hyderabad.

ASSAM

Sh. Dilip Chowdhury,
Dy.Director of Elementary
Education (Planning), — 1st November,83.
Bamilipara, Guwahati-19.

Sh.P.M. Baruah,
Sr.Consultant, Council of Education, — From December, 83
Directorate of Elementary Education,
Assam, Guwahati-6.

BIHAR

Sh. J.P. Singh,
Dy.Director of Education(of Basics)
Deptt. of Education, Govt. of Bihar,
New Secty. Building,
Patna.

JAMMU & KASHMIR

Sh.M.N.Khajuria,
Asstt.Director,
Directorate of School Education(Jammu)
Jammu Tawi.

Sh.B.L.Bindra,
Research Officer(Monitoring & Planning)
Directorate of School Education(Kashmir)
Srinagar.

Nominees

MADHYA PRADESH

Sh. Uma Shanker Chaturvedi
Asstt. Director
Directorate of Public Instruction
Madhya Pradesh, Bhopal.

ORISSA

Dr.B.N.Torasia
Dy.Director (Planning),
Directorate of Higher Education
Orissa, Bhubaneswar.

Upto September,83

Sh.S.L. Mohanty,
Dy.Director (Planning),
Directorate of Higher Education,
Orissa, Bhubaneswar.

From October,83

RAJASTHAN

Sh.Shiv Ratan Dhanwi,
Dy.Director(Social &Elementary Education)
Directorate of Primary and Secondary Education,
Rajasthan, Bikaner.

UTTAR PRADESH

Sh. S.D. Pathak,
Joint Director (Non-formal)
Directorate of Education, U.P.,
Allahabad.

Upto October,84

Sh. A.C. Tiwari,
Dy.Director (Primary),
Directorate of Education, U.P.,
Allahabad.

From November, 84

WEST BENGAL

Sh.Alok Kumar Bandopadhyay,
Asstt.Director (Statistics),
Directorate of Education, W.B.,
(Planning & Statistics Section)
6, Council House Street,
Calcutta-1.